B.E.G. LUXOMAT®




# BL4-FC Set
# 93288-92199-93183

230V PIR motion detector with 360° coverage and a range of up to Ø19m (280 m²), remote-controlled

## Order data

| Designation | Colour | Art.No |
|---|---|---|
| BL4-FC | white | 93288 |
| Wire basket BSK (Ø 200 x 90 mm) | white | 92199 |
| Mounting set BL4-SM | white | 93183 |

## Areas of application

- entrance halls
- corridors/hallways
- toilets
- equipment rooms
- small offices
- open-plan offices
- conference rooms

## Technical data

| | |
|---|---|
| Voltage: | 110 – 240 V AC 50 / 60 Hz |
| Dimensions: | **Ø 200 x 90 mm (92199) + Ø 109 x 34 mm (93183)** |
| Power consumption: | approx. 0.3 W |
| Detection area: | horizontal 360° (Ceiling mounting) |
| Range: | max. Ø 19 m across<br>max. Ø 6.4 m towards<br>max. Ø 5 m seated |
| Monitored area (tangential movement): | 280 m² / 2.5 m mounting height |
| Mounting height min./max./recommended: | 2 m / 5 m / 2.5 m |
| Degree / class of protection: | IP20 / Class II |
| Impact strength: | **IK09 (92199) + IK06 (93183)** |
| Ambient temperature: | -25 °C to +50 °C |
| Housing: | **polycarbonate, UV-resistant + coated steel basket (92199)** |
| Material color: | white mat, similar to RAL9010 |
| Connections and wires: | 0.5 – 2.5 mm² for solid conductors |
| **Channel 1 (lighting control)** | |
| Switching power: | 1000 W, cos φ = 1<br>500 VA, cos φ = 0.5<br>400 W LED |
| Type of contact (k): | 1x µ-contact, NO contact |
| Follow-up time: | 15 sec – 60 min |
| Switch-on threshold: | 10 – 2000 Lux |

## Product information

Set : BL4-FC + Wire basket BSK (Ø 200 x 90 mm) white + Mounting set BL4-SM white

Ceiling motion detector for indoor use with a 360° detection area

For mounting in suspended ceilings

One channel for light switching

Manual switching via push-button possible

**Easy operation with remote control (required)**

Basic functions for cost-effective applications

Ready-to-operate thanks to factory settings

Accessory for surface mounting and flush mounting available

Factory setting: High detection sensitivity, follow-up time 10 min, switch-on threshold 500 lux

High-performance relay designed for 100,000 switching cycles under high load, several million switching cycles possible under low load

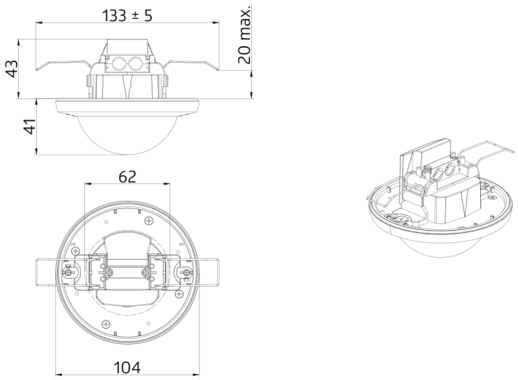
133 ± 5
20 max.
43
41
62
104

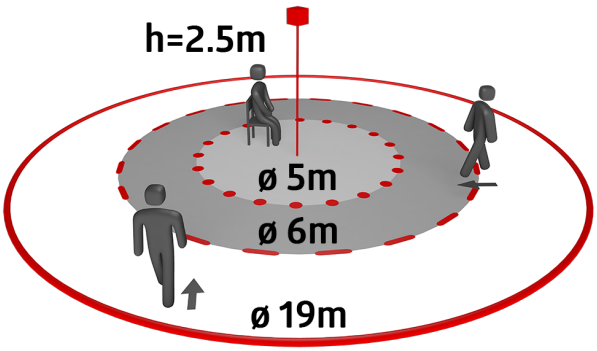
h=2.5m
ø 5m
ø 6m
ø 19m

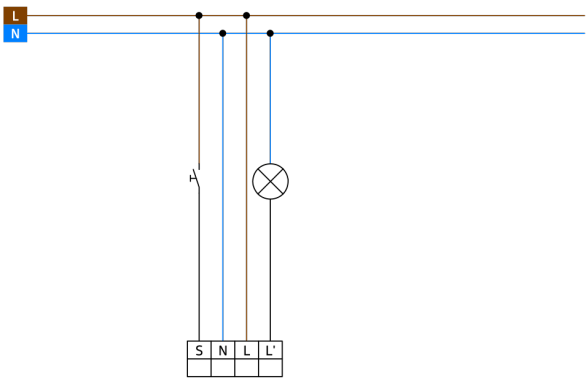
L
N
S
N
L
L'

## Set items

To receive the bundle according to the technical specification, please order the items listed.



**BL4-FC**
Art.No: 93288

Voltage: 110 – 240 V AC 50 / 60 Hz
Dimensions: Ø 104.5 x 84 mm
Power consumption: approx. 0.3 W

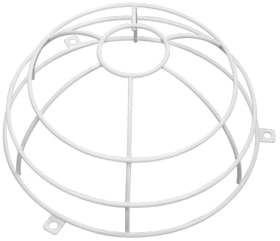

**Wire basket BSK (Ø 200 x 90 mm)**
Art.No: 92199

Dimensions: Ø 200 x 90 mm
Impact strength: IK09
Housing: coated steel basket



**Mounting set BL4-SM**
Art.No: 93183

Dimensions: Ø 109 x 34 mm
Impact strength: IK06
Material color: white