B.E.G. LUXOMAT®



Central plate Indoor 180 45x45

38947 EAN: 4007529389476

Central plate for mounting a sensor insert Indoor 180 in a corresponding switch module

Order data

Designation	Colour	Art.No
Central plate Indoor 180 45x45	traffic white	38947

Technical data

Dimensions:	45 x 45 mm
Material color:	traffic white mat, similar to RAL9016

Product information

Central plate for mounting a sensor insert Indoor 180 in a corresponding switch module

Suitable for: 40114, 92135, 92136, 92621, 92623, 92650, 92660, 92661, 92665, 92666, 92667, 92668, 93524, 93525, 93540, ...

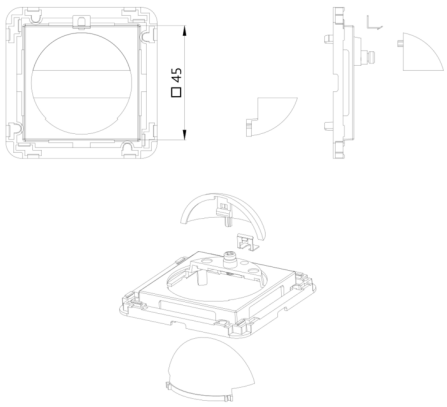
□45