B.E.G. LUXOMAT®

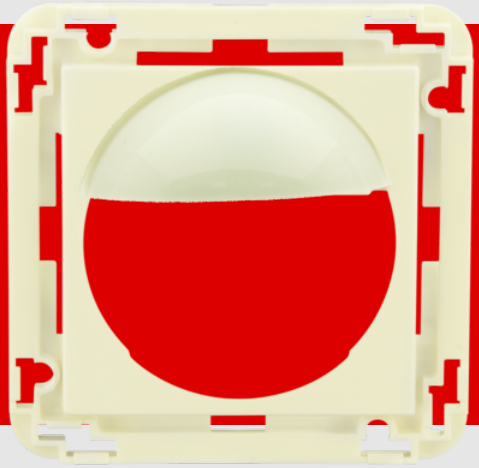

Central plate Indoor 180 45x45

39076 EAN: 4007529390762

Central plate for mounting a sensor insert Indoor 180 in a corresponding switch module

Order data

Designation	Colour	Art.No
Central plate Indoor 180 45x45	oyster white	39076

Technical data

Dimensions:	45 x 45 mm
Housing:	polycarbonate, UV-resistant
Material color:	oyster white mat, similar to RAL1013

Product information

Central plate for mounting a sensor insert Indoor 180 in a corresponding switch module

Suitable for: 40114, 92135, 92136, 92621, 92623, 92650, 92660, 92661, 92665, 92666, 92667, 92668, 93524, 93525, 93540, ...

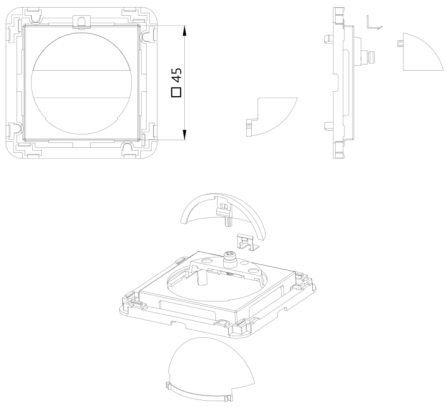
□45