B.E.G. LUXOMAT®



Central plate Indoor 180 55 x 55 mm

39241 EAN: 4007529392414

Center plate for indoor 180 Wall switch

Order data

Designation	Colour	Art.No
Central plate Indoor 180 55 x 55 mm	signal white	39241

Technical data

Dimensions:	55 x 55 mm
Housing:	polycarbonate, UV-resistant
Material color:	signal white glossy, similar to RAL9003

Product information

Center plate for indoor 180 Wall switch

Suitable for: 92135, 92136, 92621, 92623, 92650, 92660, 92661, 92665, 92666, 92667, 92668, 93524, 93525, 93540, ...

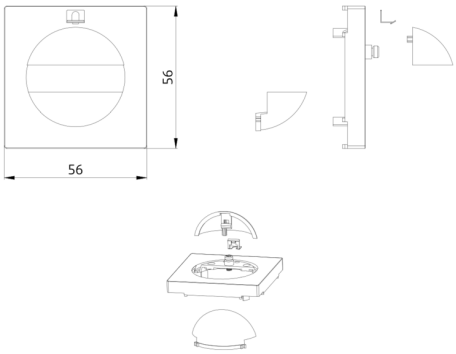
56
56