B.E.G. LUXOMAT®

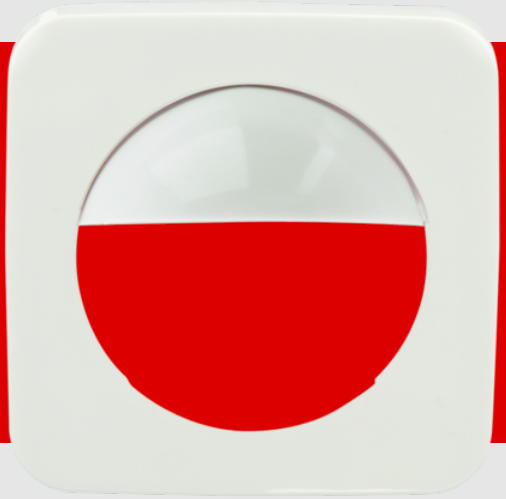

Central plate Indoor 180 55x55

39242 EAN: 4007529392421

Center plate for indoor 180 Wall switch

Order data

Designation	Colour	Art.No
Central plate Indoor 180 55x55	traffic white	39242

Technical data

Dimensions:	55 x 55 mm
Housing:	polycarbonate, UV-resistant
Material color:	traffic white glossy, similar to RAL9016

Product information

Center plate for indoor 180 Wall switch

Suitable for: 92135, 92136, 92621, 92623, 92650, 92660, 92661, 92665, 92666, 92667, 92668, 93524, 93525, 93540, ...

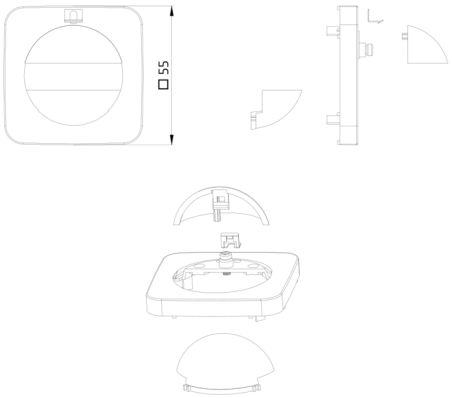
□55