B.E.G. LUXOMAT®



Central plate Indoor 180 56x56 modular2

35127 EAN: 4007529351275

Centre plate for installation of an Indoor 180 sensor insert in the Berker switch module Module 2

Order data

Designation	Colour	Art.No
Central plate Indoor 180 56x56 modular2	pure white	35127

Technical data

Dimensions:	56 x 56 mm
Housing:	polycarbonate, UV-resistant
Material color:	pure white glossy, similar to RAL9010

Product information

Centre plate for installation of an Indoor 180 sensor insert in the Berker switch module Module 2

Suitable for: 92135, 92136, 92621, 92623, 92650, 92660, 92661, 92665, 92666, 92667, 92668, 93524, 93525, 93540, ...

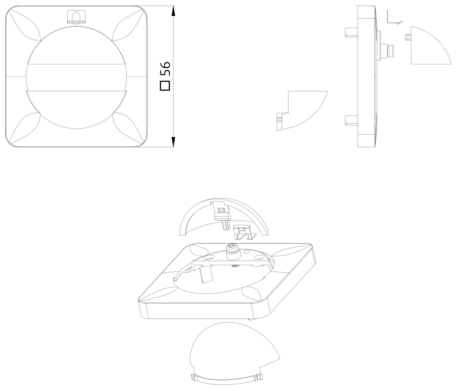
□56