B.E.G. LUXOMAT® net



DIM4-230/1-10V/16/H/KNX REG

93980 EAN: 4007529939800

The lights are regulated by way of 1-10V voltage.
The voltage 1-10V is provided by the EBs.

The device is equipped with short circuit and temperature protection, as well as a lamp-preserving soft start

The device is planned for permanent installation on a DIN-rail (top-hat) in high voltage current distributors

Order data

Designation	Colour	Art.No
DIM4-230/1-10V/16/H/KNX REG	–	93980

Technical data

Voltage:	230 V AC
Dimensions:	86 x 72 x 60 mm (4 TE)
Output voltage:	230 V AC 50 Hz
Degree / class of protection:	IP20 / Class II
Ambient temperature:	0 °C to +45 °C
Housing:	Plastic LEXAN UL-94-V0
Material color:	–
Display elements:	Red LED: Programming LED Green LED: Channel status
Manual operation:	Manual operation of the shutter channels directly on the device
KNX TP 256:	Yes
Switching power:	16 A cos φ = 1 **resistive loads** 2700 W **HV halogen lamps** 1000 W **LV halogen lamps** 2500 W **Fluorescent lamps uncompensated** 1800 W **Fluorescent lamps parallel compensated** 1000 W **capacitive loads** max. 100 µF
DIM output:	4 dim outputs 1-10 V DC, up to 30 mA per channel

Product information

The dimmer actuators KNX CD-4C serves the purpose of switching and dimming fluorescent lamps with 1-10V EB. The voltage is directed to the EB through the relay of the device.

The lights are regulated by way of 1-10V voltage. **The voltage 1-10V is provided by the EBs.**

The device is equipped with short circuit and temperature protection, as well as a lamp-preserving soft start

The device is planned for permanent installation on a DIN-rail (top-hat) in high voltage current distributors

Installation must take place in dry interiors

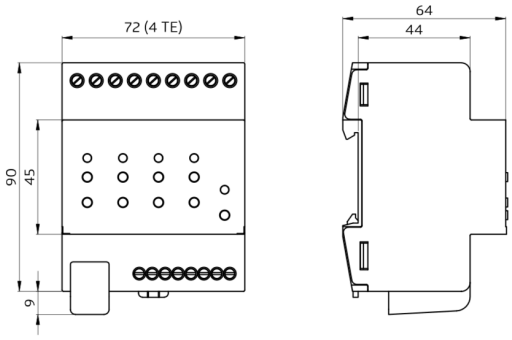
72 (4 TE)
90
45
9
64
44