

DL12-18-172-LED-3C

93168 EAN: 4007529931682

LED downlight for flush-mounting in ceilings

Robust plastic housing with integrated control gear

Aluminium reflector with facets for good glare control

Order data

Designation	Colour	Art.No
DL12-18-172-LED-3C	white	93168

Technical data

Voltage:	200 – 240 V AC 50 / 60 Hz
Dimensions:	Ø 172 x 97 mm
Colour temperature:	3000 / 4000 / 5700 K
Luminous flux / intensity:	1800 / 2000 / 2200 lm
Efficiency:	100 / 111 / 122 lm/W
Photobiological safety:	RG 0
Colour reproduction:	CRI 83 / TM30: 81
Rated life time:	50000 h (L80/B50), 45000 h (L80/B10)
Power consumption:	18 W / PF 0.95
Degree / class of protection:	IP20 / Class II
Ambient temperature:	-15 °C to +35 °C
Housing:	Plastic Optics: Alumininium reflector with facets
Material color:	white

Product information

LED downlight for flush-mounting in ceilings

Robust plastic housing with integrated control gear

Aluminium reflector with facets for good glare control

Very flat, white cover ring

Underside splash-proof (IP54), top housing IP20

Three colours in one light, switchable selection between warm, neutral or daylight white illumination

Energy efficient light with long service life > 50,000 hours

Every colour temperature is externally dimmable

Simple installation and electrical connection

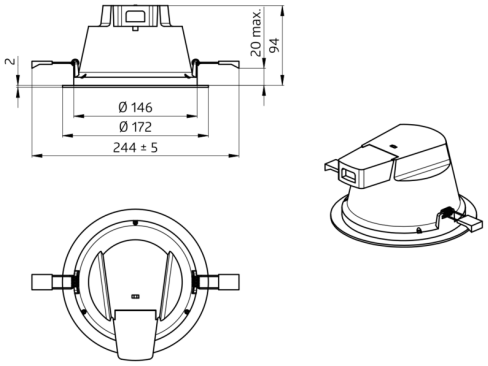

h (m)	Ø (m)	E (lx)
1.0	3	954
2.0	6.1	238
3.0	9.1	106
4.0	12.2	60
5.0	15.2	38

