B.E.G. LUXOMAT®



Indoor 140-L covering included

94328 EAN: 4007529943289

230V PIR wall-mounted motion detector with a 120° detection angle and a range of up to 8 m (67 m²), featuring a built-in push button, orientation light, and night light

Order data

Designation	Colour	Art.No
Indoor 140-L covering included	pure white	94328

Areas of application

- corridors/hallways
- entrance halls
- staircases
- toilets
- equipment rooms

Accessories

Designation	Colour	Art.No
Frame IP20 Indoor 140-L	oyster white	94344
Frame IP20 Indoor 140-L	pure white	94343
Frame IP20 Indoor 140-L	pure white	94342
Frame IP20 Indoor 140-L	anthracite	94341
Central plate Indoor 140 45x45	pure white	38946
Central plate Indoor 140 45x45	oyster white	39075
Central plate Indoor 140 55x55	pure white	94346
Central plate Indoor 140 63x63	pure white	94345

Technical data

Voltage:	110 – 240 V AC 50 / 60 Hz
Dimensions:	covering included 88 x 88 x 52 mm
Power consumption:	approx. 0.4 W / approx. 0.8 W with nightlight
Detection area:	horizontal 120° (Wall mounting)
Range:	max. 8 m across max. 3 m towards
Monitored area (tangential movement):	67 m² / 1.1 m mounting height
Mounting height min./max./recommended:	1 m / 1.2 m / 1.1 m
Degree / class of protection:	IP20 / Class II
Impact strength:	IK07
Ambient temperature:	-25 °C to +50 °C
Housing:	**94325:** (covering not included) **94328:** polycarbonate, UV-resistant
Material color:	pure white glossy, similar to RAL9010
Channel 1 (lighting control)	
Switching power:	2000 W, cos φ = 1 1000 VA, cos φ = 0.5 800 W LED max. inrush current Ip (20 ms) = 165 A max. inrush current Ip (20 µs) = 800 A
Type of contact (k):	1x µ-contact, NO contact with tungsten pre-make contact
Follow-up time:	15 sec – 30 min
Orientation light:	0 – 100 % / OFF / 15 s – 30 min
Night light:	0 – 100 %
Switch-on threshold:	10 – 2000 Lux

Product information

Wall-mounted occupancy detector with integrated pushbutton

One channel for switching light (selectively main light or orientation light)

Integrated downlight with the function of an orientation or a night light

Extension of the detection range possible by using up to 5 other Indoor 140-L

Can be used as either Master device or Slave device

Relay with tungsten pre-make contact, optimised for LED loads

Available with covering (centre plate dimensions 60 x 60 mm) or without covering for use with covering (centre plate dimensions 50 x 50 mm) in 4 different colours

Please order coverings for EU version separately; available in various colours

In combination with centre plates usable with current frame systems of various manufacturers

B.E.G. frames and centre plates for combination with other frame systems available

Application examples:
corridors/hallways, entrance halls, staircases, toilets, equipment rooms

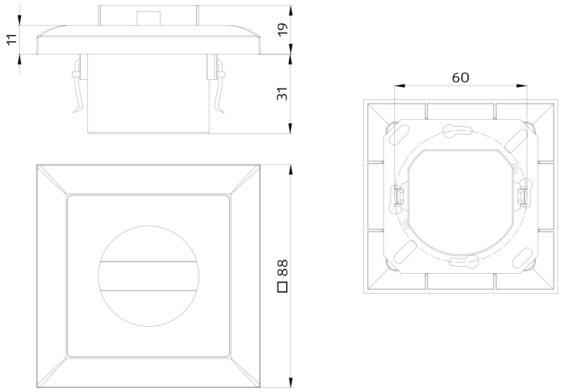
11
19
31
□88
60

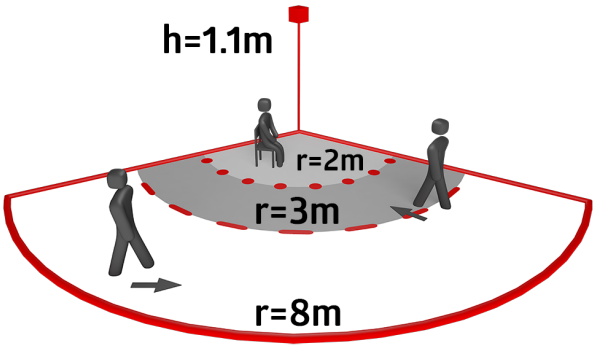
h=1.1m
r=2m
r=3m
r=8m

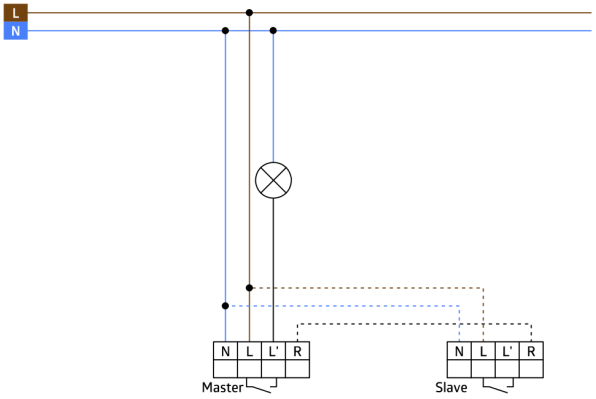
L
N
N L L' R
Master
N L L' R
Slave

Accessories



Frame IP20 Indoor 140-L
Art.No: 94344

Dimensions: 88 x 88 mm, Inside dimension: 63 x 63 mm
Degree / class of protection: IP20 / Class II
Material color: oyster white mat, similar to RAL1013



Frame IP20 Indoor 140-L
Art.No: 94343

Dimensions: 88 x 88 mm, Inside dimension: 63 x 63 mm
Degree / class of protection: IP20 / Class II
Material color: pure white mat, similar to RAL9010



Frame IP20 Indoor 140-L
Art.No: 94342

Dimensions: 88 x 88 mm, Inside dimension: 63 x 63 mm
Degree / class of protection: IP20 / Class II
Material color: pure white glossy, similar to RAL9010



Frame IP20 Indoor 140-L
Art.No: 94341

Dimensions: 88 x 88 mm, Inside dimension: 63 x 63 mm
Degree / class of protection: IP20 / Class II
Material color: anthracite mat, similar to RAL7021



Central plate Indoor 140 45x45
Art.No: 38946

Dimensions: 45 x 45 mm
Degree / class of protection: IP20 / Class II
Material color: pure white glossy, similar to RAL9010



Central plate Indoor 140 45x45
Art.No: 39075

Dimensions: 45 x 45 mm
Degree / class of protection: IP20 / Class II
Material color: oyster white mat, similar to RAL1013



Central plate Indoor 140 55x55
Art.No: 94346

Dimensions: 55 x 55 mm
Housing: polycarbonate, UV-resistant
Material color: pure white glossy, similar to RAL9010

Central plate Indoor 140 63x63
Art.No: 94345

Dimensions: 63 x 63 mm
Housing: polycarbonate, UV-resistant
Material color: pure white glossy, similar to RAL9010