B.E.G. LUXOMAT® net

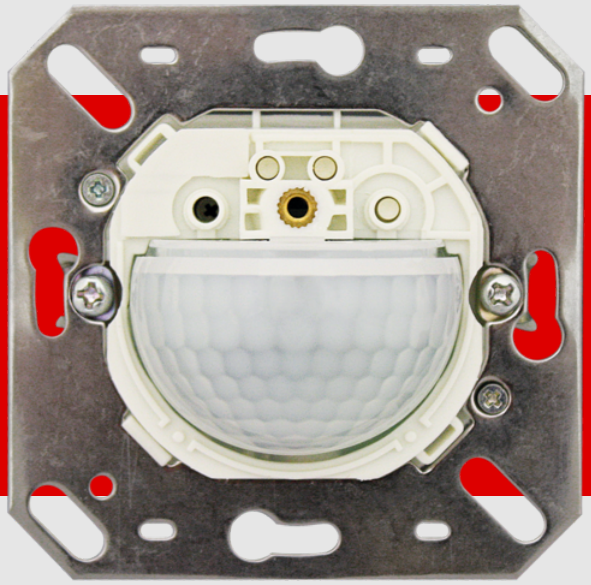

Indoor 180-BMS DALI-2 covering not included

93540 EAN: 4007529935406

DALI-2 (BMS) PIR wall-mounted multisensor with 180° detection and a range of up to 10 m (150 m²), DALI-2 input device

Order data

Designation	Colour	Art.No
Indoor 180-BMS DALI-2 covering not included	white	93540

Accessories

Designation	Colour	Art.No
Frame IP20 Indoor 180	pure white	92630
Frame IP20 Indoor 180	traffic white	92631
Frame IP20 Indoor 180	anthracite	92634
Frame IP54 Indoor 180	pure white	92139
Frame IP20 Indoor 180	oyster white	92632
Frame IP20 Indoor 180	silver	92633
Surface mounting socket Indoor 180	pure white	92141
Central plate Indoor 180 45x45	traffic white	38947
Central plate Indoor 180 45x45	oyster white	39076
Central plate Indoor 180 55 x 55 mm	pure white	39222
Central plate Indoor 180 55 x 55 mm	traffic white	39223

Central plate Indoor 180 55 x 55 mm	signal white	39241
Central plate Indoor 180 55x55	traffic white	39242
Central plate Indoor 180 S1 56x56	pure white	35126
Central plate Indoor 180 56x56 modular2	pure white	35127
Blinds Indoor 180 transparent		92294
Blind Indoor 180		33233
protective cap Indoor 180		92018

Technical data

Voltage:	via DALI Bus, max. 22.5 V DC
Dimensions:	70 x 70 x 61 mm
Settings:	via DALI-Bus and application which supports DALI multisensors according to IEC62386, parts 101, 103, 303 and 304
Typ. power input:	7 mA
Settling time:	200 ms
Power consumption:	approx. 0.5 W
Detection area:	horizontal 180° (Wall mounting)
Range:	max. 10 m across max. 3 m towards
Monitored area (tangential movement):	150 m² / 1.1 m mounting height
Mounting height min./max./recommended:	1 m / 2.2 m / 1.1 m
Degree / class of protection:	IP20 / Class II
Impact strength:	IK05
Measured light output:	0 - 4095 Lux, Mixed light measuring
Ambient temperature:	-25 °C to +55 °C
Housing:	polycarbonate, UV-resistant
Material color:	white mat, similar to RAL9010

Product information

DALI-2 multisensor (input device), especially for installation in walls

DALI-2 certified product

Powered via DALI bus

DALI multimaster technology according to IEC 62386 part 103

Instance 0 provides information regarding occupancy and movement for the DALI-Bus according to IEC 62386 part 303

Instance 1 provides LUX values for the DALI-Bus according to IEC 62386 part 304

Parameterisation is possible via mandatory Multimaster-Application-Controller of any manufacturer. This controller must support IEC 62386 parts 101/103/303/304.

Measuring of mixed light thanks to internal light sensor

Detection area can be restricted with blinds

For use with covering (interior cover dimensions 50 x 50 mm) in 5 different colours

In combination with centre plates usable with current frame systems of various manufacturers

B.E.G. frames and centre plates for combination with other frame systems available

Please order cover frame separately, available in various colours

Individual adaption of the PIR sensor sensitivity

Status LEDs can be activated / deactivated

Application examples:
underground car parks, entrance halls, corridors/hallways, staircases, toilets, equipment rooms

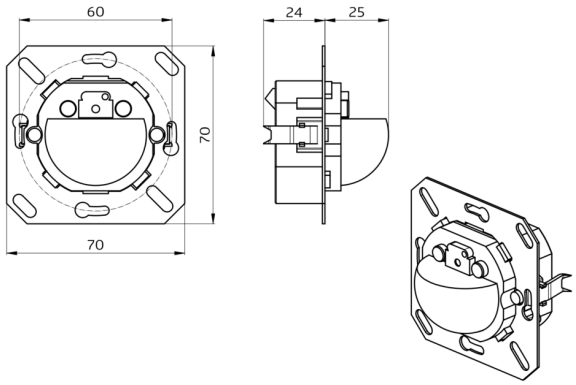
60
70
70
24
25

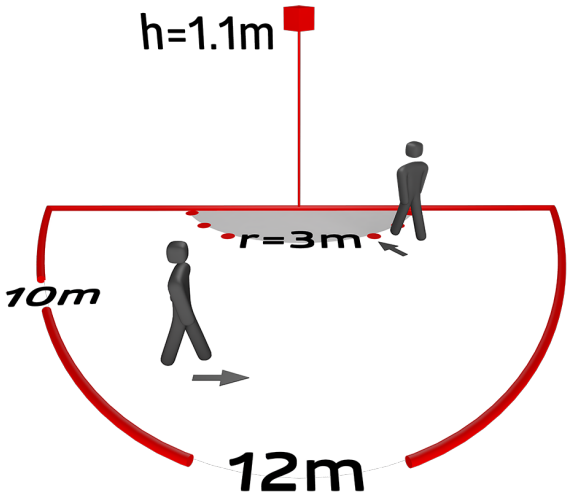
h=1.1m
r=3m
10m
12m

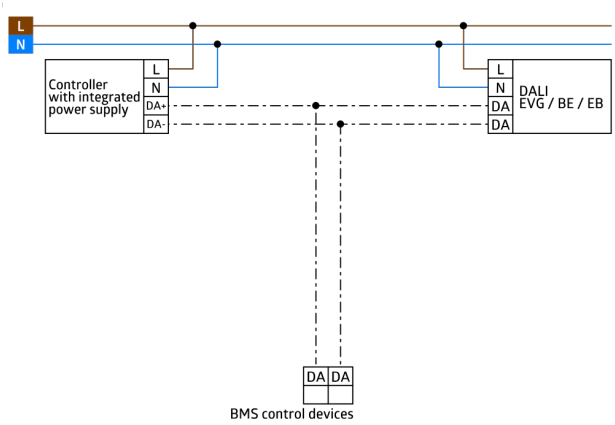
L
N
Controller
with integrated
power supply
L
N
DA+
DA-
L
N
DA
DA
DALI
EVG / BE / EB
DA
DA
BMS control devices

Accessories



Frame IP20 Indoor 180
Art.No: 92630

Dimensions: 86 x 86 mm
Degree / class of protection: IP20
Housing: polycarbonate, UV-resistant



Frame IP20 Indoor 180
Art.No: 92631

Dimensions: 86 x 86 mm
Degree / class of protection: IP20
Housing: polycarbonate, UV-resistant



Frame IP20 Indoor 180
Art.No: 92634

Dimensions: 86 x 86 mm
Degree / class of protection: IP20
Housing: polycarbonate, UV-resistant



Frame IP54 Indoor 180
Art.No: 92139

Dimensions: 87 x 87 mm
Degree / class of protection: IP54
Housing: polycarbonate, UV-resistant



Frame IP20 Indoor 180
Art.No: 92632

Dimensions: 86 x 86 mm
Degree / class of protection: IP20
Housing: polycarbonate, UV-resistant



Frame IP20 Indoor 180
Art.No: 92633

Dimensions: 86 x 86 mm
Degree / class of protection: IP20
Housing: polycarbonate, UV-resistant



Surface mounting socket Indoor 180
Art.No: 92141

Dimensions: 88 x 88 x 42 mm
Degree / class of protection: IP54
Impact strength: IK05



Central plate Indoor 180 45x45
Art.No: 38947

Dimensions: 45 x 45 mm
Material color: traffic white mat, similar to RAL9016



Central plate Indoor 180 45x45
Art.No: 39076

Dimensions: 45 x 45 mm
Housing: polycarbonate, UV-resistant
Material color: oyster white mat, similar to RAL1013

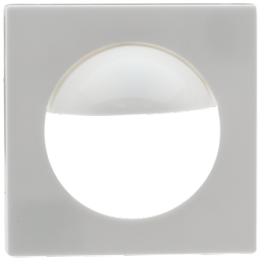

Central plate Indoor 180 55 x 55 mm
Art.No: 39222

Dimensions: 55 x 55 mm
Housing: polycarbonate, UV-resistant
Material color: pure white glossy, similar to RAL9010



Central plate Indoor 180 55 x 55 mm
Art.No: 39223

Dimensions: 55 x 55 mm
Housing: polycarbonate, UV-resistant
Material color: traffic white glossy



Central plate Indoor 180 55 x 55 mm
Art.No: 39241

Dimensions: 55 x 55 mm
Housing: polycarbonate, UV-resistant
Material color: signal white glossy, similar to RAL9003



Central plate Indoor 180 55x55
Art.No: 39242

Dimensions: 55 x 55 mm
Housing: polycarbonate, UV-resistant
Material color: traffic white glossy, similar to RAL9016



Central plate Indoor 180 S1 56x56
Art.No: 35126

Dimensions: 56 x 56 mm
Housing: polycarbonate, UV-resistant
Material color: pure white glossy, similar to RAL9010



Central plate Indoor 180 56x56 modular2
Art.No: 35127

Dimensions: 56 x 56 mm
Housing: polycarbonate, UV-resistant
Material color: pure white glossy, similar to RAL9010



Blinds Indoor 180 transparent
Art.No: 92294

Housing: polycarbonate, UV-resistant

Blind Indoor 180
Art.No: 33233

Housing: polycarbonate, UV-resistant
Material color: white



protective cap Indoor 180
Art.No: 92018

Dimensions: 56 x 56 mm
Housing: polycarbonate, UV-resistant
Material color: pure white glossy, similar to RAL9010