B.E.G. LUXOMAT® net

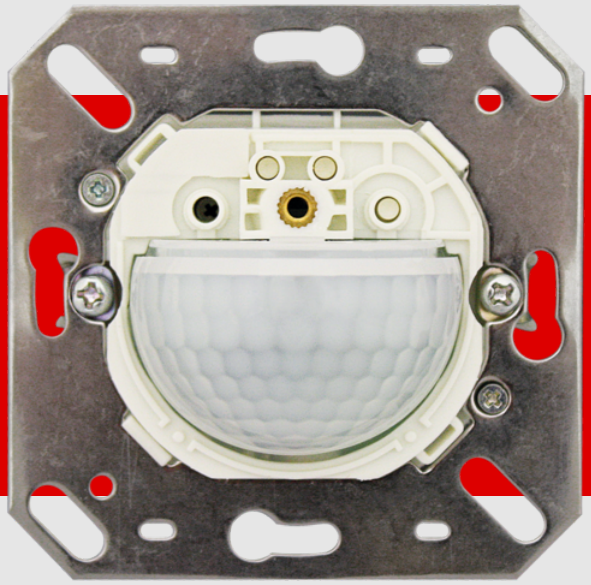

Indoor 180-BMS DALI-2 covering not included Set 93540-92630

DALI-2 (BMS) PIR wall-mounted multisensor with 180° detection and a range of up to 10 m (150 m²), DALI-2 input device

Order data

Designation	Colour	Art.No
Indoor 180-BMS DALI-2 covering not included	white	93540
Frame IP20 Indoor 180	pure white	92630

Technical data

Voltage:	via DALI Bus, max. 22.5 V DC
Dimensions:	70 x 70 x 61 mm
Settings:	via DALI-Bus and application which supports DALI multisensors according to IEC62386, parts 101, 103, 303 and 304
Typ. power input:	7 mA
Settling time:	200 ms
Power consumption:	approx. 0.5 W
Detection area:	horizontal 180° (Wall mounting)
Range:	max. 10 m across max. 3 m towards
Monitored area (tangential movement):	150 m² / 1.1 m mounting height
Mounting height min./max./recommended:	1 m / 2.2 m / 1.1 m
Degree / class of protection:	IP20 / Class II
Impact strength:	IK05
Measured light output:	0 - 4095 Lux, Mixed light measuring
Ambient temperature:	-25 °C to +55 °C
Housing:	polycarbonate, UV-resistant
Material color:	**pure white mat, similar to RAL9010 (92630)**

Product information

Set : Indoor 180-BMS DALI-2 covering not included + Frame IP20 Indoor 180 pure white mat, similar to RAL9010

DALI-2 multisensor (input device), especially for installation in walls

DALI-2 certified product

Powered via DALI bus

DALI multimaster technology according to IEC 62386 part 103

Instance 0 provides information regarding occupancy and movement for the DALI-Bus according to IEC 62386 part 303

Instance 1 provides LUX values for the DALI-Bus according to IEC 62386 part 304

Parameterisation is possible via mandatory Multimaster-Application-Controller of any manufacturer. This controller must support IEC 62386 parts 101/103/303/304.

Measuring of mixed light thanks to internal light sensor

Detection area can be restricted with blinds

For use with covering (interior cover dimensions 50 x 50 mm) in 5 different colours

In combination with centre plates usable with current frame systems of various manufacturers

B.E.G. frames and centre plates for combination with other frame systems available

Please order cover frame separately, available in various colours

Individual adaption of the PIR sensor sensitivity

Status LEDs can be activated / deactivated

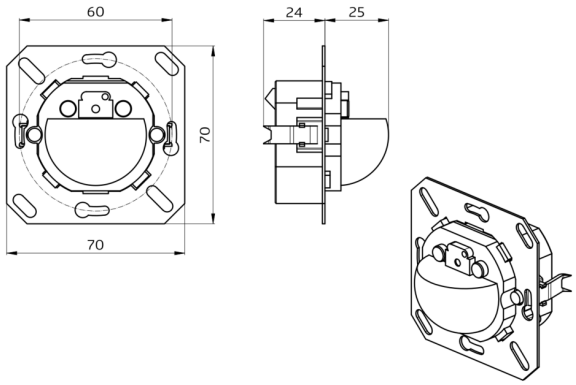
60
70
70
24
25

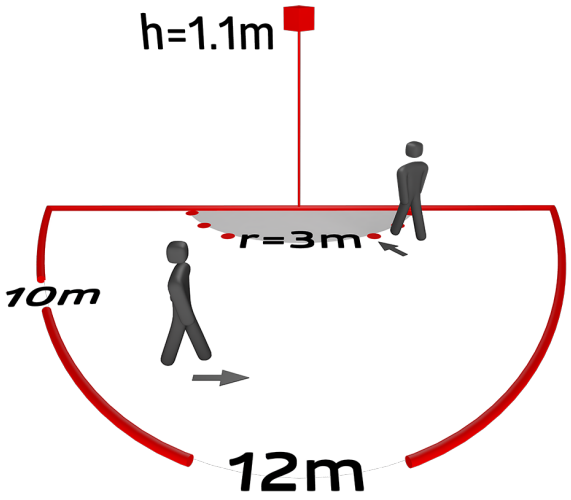
h=1.1m
r=3m
10m
12m

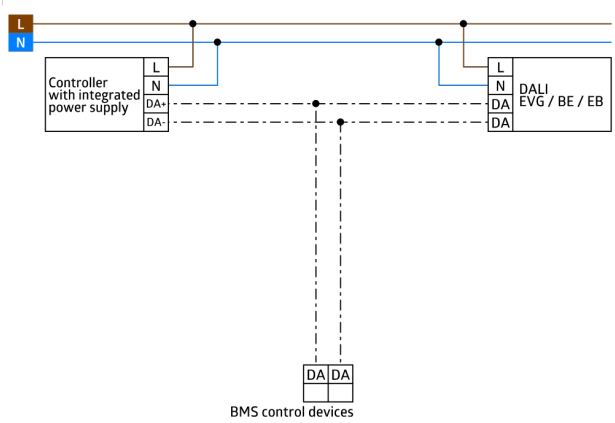
L
N
Controller
with integrated
power supply
L
N
DA+
DA-
L
N
DA
DA
DALI
EVG / BE / EB
DA
DA
BMS control devices

Set items

To receive the bundle according to the technical specification, please order the items listed.



Indoor 180-BMS DALI-2 covering not included
Art.No: 93540

Voltage: via DALI Bus, max. 22.5 V DC
Dimensions: 70 x 70 x 61 mm
Settings: via DALI-Bus and application which supports DALI multisensors according to IEC62386, parts 101, 103, 303 and 304



Frame IP20 Indoor 180
Art.No: 92630

Dimensions: 86 x 86 mm
Degree / class of protection: IP20
Housing: polycarbonate, UV-resistant