B.E.G. LUXOMAT®



Indoor 180-R-11-48V-3A covering included Set 92621-92632

11–48 V PIR wall-mounted motion detector with 180° detection angle and a range of up to 10 m (150 m²), featuring an acoustic sensor and a dry contact

Order data

Designation	Colour	Art.No
Indoor 180-R-11-48V-3A covering included	pure white	92621
Frame IP20 Indoor 180	oyster white	92632

Technical data

Voltage:	11 – 48 V AC / DC
Dimensions:	covering included 87 x 87 x 61 mm
Power consumption:	approx. 1 W
Detection area:	horizontal 180° (Wall mounting)
Range:	max. 10 m across max. 3 m towards
Monitored area (tangential movement):	150 m² / 1.1 m mounting height
Mounting height min./max./recommended:	1 m / 2.2 m / 1.1 m
Degree / class of protection:	IP20 / Class II
Impact strength:	IK05
Ambient temperature:	-25 °C to +50 °C
Housing:	polycarbonate, UV-resistant
Material color:	**oyster white mat, similar to RAL1013 (92632)**
Channel 1 (lighting control, potential-free (dry))	
Switching power:	3 A; cos φ = 1
Type of contact (k):	µ-contact, dry NO contact
Follow-up time:	15 sec – 16 min, Pulse
Switch-on threshold:	5 – 2000 Lux

Product information

Set : Indoor 180-R-11-48V-3A covering included + Frame IP20 Indoor 180 oyster white mat, similar to RAL1013

Wall motion detector with acoustic sensor, operating voltage 11-48 V

One potential-free switching channel

Acoustic sensor independently adjustable

Noise automatically extends follow-up time

Manual switching via push-button possible

Available with covering (centre plate dimensions 60 x 60 mm) or without covering for use with covering (centre plate dimensions 50 x 50 mm) in 5 different colours

In combination with centre plates usable with current frame systems of various manufacturers

B.E.G. frames and centre plates for combination with other frame systems available

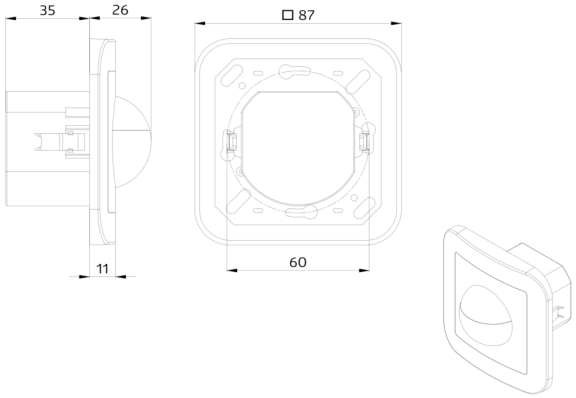
35
26
□ 87
11
60

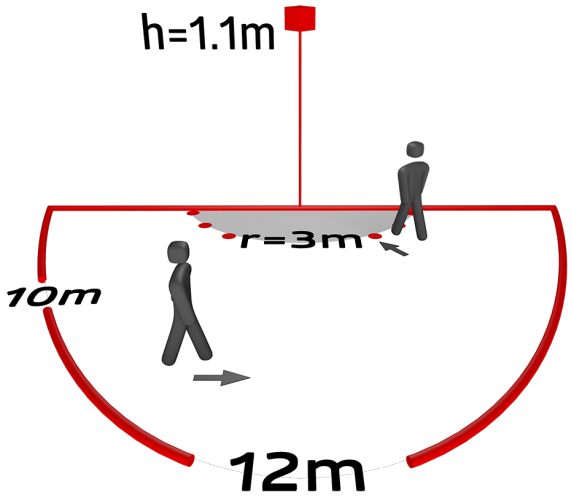
h=1.1m
r=3m
10m
12m

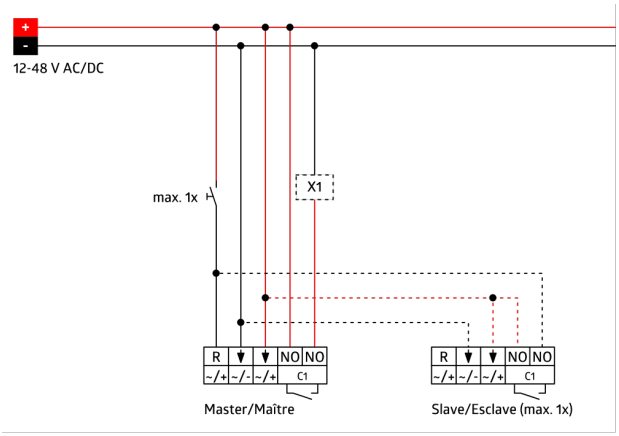
+
-
12-48 V AC/DC
max. 1x
X1
R
NO
NO
C1
Master/Maître
Slave/Esclave (max. 1x)

Set items

To receive the bundle according to the technical specification, please order the items listed.



Indoor 180-R-11-48V-3A covering included
Art.No: 92621

Voltage: 11 – 48 V AC / DC
Dimensions: covering included 87 x 87 x 61 mm
Power consumption: approx. 1 W



Frame IP20 Indoor 180
Art.No: 92632

Dimensions: 86 x 86 mm
Degree / class of protection: IP20
Housing: polycarbonate, UV-resistant