B.E.G. LUXOMAT®



# Indoor 180-R covering included Set 92623-92141

230V PIR wall-mounted motion detector with 180° detection angle and a range of up to 10 meters (150 m²), with an acoustic sensor

## Order data

| Designation | Colour | Art.No |
|---|---|---|
| Indoor 180-R covering included | pure white | 92623 |
| Surface mounting socket Indoor 180 | pure white | 92141 |

## Areas of application

- entrance halls
- corridors/hallways
- staircases
- toilets
- equipment rooms

## Technical data

| | |
|---|---|
| Voltage: | 110 – 240 V AC 50 / 60 Hz |
| Dimensions: | **88 x 88 x 42 mm (92141)** |
| Power consumption: | approx. 0.5 W |
| Detection area: | horizontal 180° (Wall mounting) |
| Range: | max. 10 m across<br>max. 3 m towards |
| Monitored area (tangential movement): | 150 m² / 1.1 m mounting height |
| Mounting height min./max./recommended: | 1 m / 2.2 m / 1.1 m |
| Degree / class of protection: | **IP54 (92141)** |
| Impact strength: | IK05 |
| Ambient temperature: | -25 °C to +50 °C |
| Housing: | polycarbonate, UV-resistant |
| Material color: | pure white mat, similar to RAL9010 |
| **Channel 1 (lighting control)** | |
| Switching power: | 2300 W, cos φ = 1<br>1150 VA, cos φ = 0.5<br>800 W LED<br>max. inrush current Ip (20 ms) = 165 A<br>max. inrush current Ip (200 µs) = 800 A |
| Type of contact (k): | 1x µ-contact, NO contact with tungsten pre-make contact |
| Follow-up time: | 15 sec – 16 min, Pulse |
| Switch-on threshold: | 10 – 2000 Lux |

## Product information

Set : Indoor 180-R covering included + Surface mounting socket Indoor 180 pure white mat, similar to RAL9010

Wall motion detector with acoustic sensor

Relay version with three-wire technology

Acoustic sensor independently adjustable

Noise automatically extends follow-up time

Manual switching via push-button possible

Available with covering (centre plate dimensions 60 x 60 mm) or without covering for use with covering (centre plate dimensions 50 x 50 mm) in 5 different colours

In combination with centre plates usable with current frame systems of various manufacturers

B.E.G. frames and centre plates for combination with other frame systems available

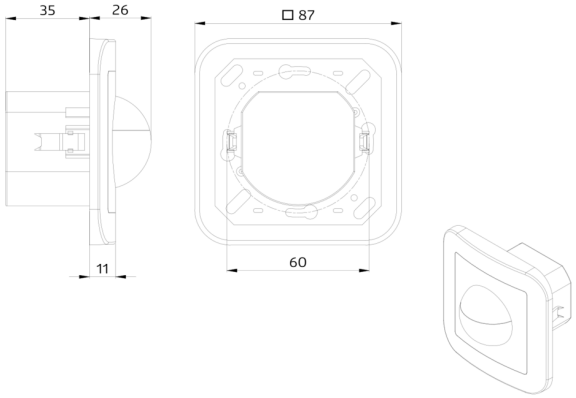
35
26
□ 87
11
60

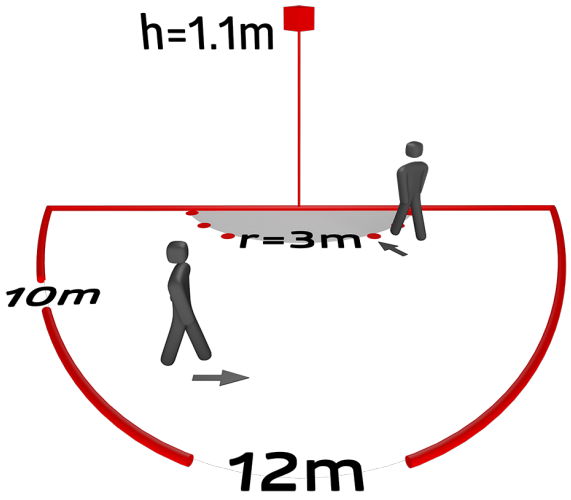
h=1.1m
r=3m
10m
12m

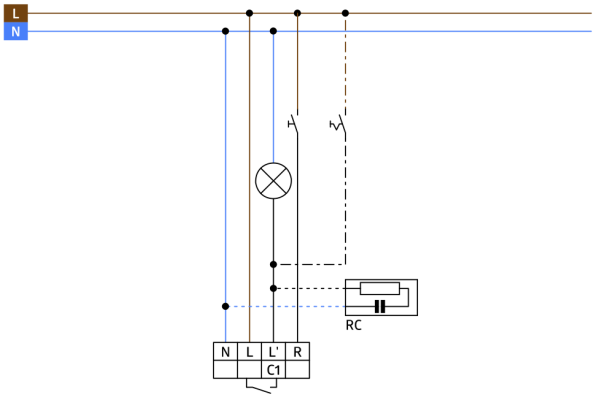
L
N
RC
N
L
L'
R
C1

## Set items

To receive the bundle according to the technical specification, please order the items listed.



**Indoor 180-R covering included**
Art.No: 92623

Voltage: 110 – 240 V AC 50 / 60 Hz
Dimensions: covering included 87 x 87 x 61 mm
Power consumption: approx. 0.5 W



**Surface mounting socket Indoor 180**
Art.No: 92141

Dimensions: 88 x 88 x 42 mm
Degree / class of protection: IP54
Impact strength: IK05