B.E.G. LUXOMAT®



Indoor 180-R covering included Set 92623-92634

230V PIR wall-mounted motion detector with 180° detection angle and a range of up to 10 meters (150 m²), with an acoustic sensor

Order data

Designation	Colour	Art.No
Indoor 180-R covering included	pure white	92623
Frame IP20 Indoor 180	anthracite	92634

Areas of application

- entrance halls
- corridors/hallways
- staircases
- toilets
- equipment rooms

Technical data

Voltage:	110 – 240 V AC 50 / 60 Hz
Dimensions:	covering included 87 x 87 x 61 mm
Power consumption:	approx. 0.5 W
Detection area:	horizontal 180° (Wall mounting)
Range:	max. 10 m across max. 3 m towards
Monitored area (tangential movement):	150 m² / 1.1 m mounting height
Mounting height min./max./recommended:	1 m / 2.2 m / 1.1 m
Degree / class of protection:	IP20 / Class II
Impact strength:	IK05
Ambient temperature:	-25 °C to +50 °C
Housing:	polycarbonate, UV-resistant
Material color:	**anthracite mat, similar to RAL7021 (92634)**
Channel 1 (lighting control)	
Switching power:	2300 W, cos φ = 1 1150 VA, cos φ = 0.5 800 W LED max. inrush current Ip (20 ms) = 165 A max. inrush current Ip (200 µs) = 800 A
Type of contact (k):	1x µ-contact, NO contact with tungsten pre-make contact
Follow-up time:	15 sec – 16 min, Pulse
Switch-on threshold:	10 – 2000 Lux

Product information

Set : Indoor 180-R covering included + Frame IP20 Indoor 180 anthracite mat, similar to RAL7021

Wall motion detector with acoustic sensor

Relay version with three-wire technology

Acoustic sensor independently adjustable

Noise automatically extends follow-up time

Manual switching via push-button possible

Available with covering (centre plate dimensions 60 x 60 mm) or without covering for use with covering (centre plate dimensions 50 x 50 mm) in 5 different colours

In combination with centre plates usable with current frame systems of various manufacturers

B.E.G. frames and centre plates for combination with other frame systems available

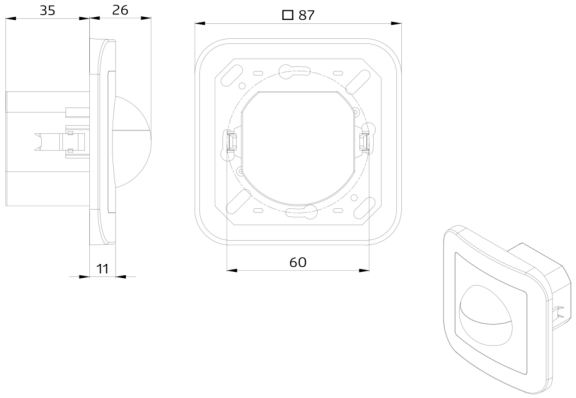
35
26
□ 87
11
60

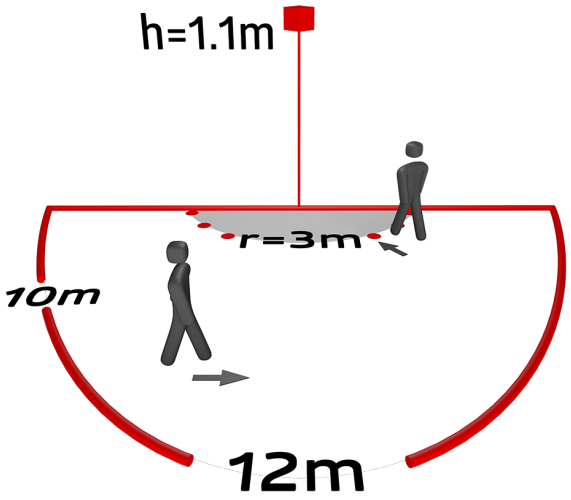
h=1.1m
r=3m
10m
12m

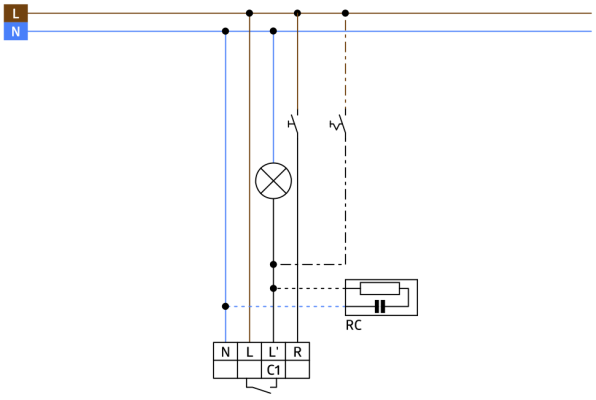
L
N
RC
N
L
L'
R
C1

Set items

To receive the bundle according to the technical specification, please order the items listed.



Indoor 180-R covering included
Art.No: 92623

Voltage: 110 – 240 V AC 50 / 60 Hz
Dimensions: covering included 87 x 87 x 61 mm
Power consumption: approx. 0.5 W



Frame IP20 Indoor 180
Art.No: 92634

Dimensions: 86 x 86 mm
Degree / class of protection: IP20
Housing: polycarbonate, UV-resistant