B.E.G. LUXOMAT®



Indoor 180-R covering not included Set 92665-92634

230V PIR wall-mounted motion detector with 180° detection angle and a range of up to 10 m (150 m²), with an acoustic sensor

Order data

Designation	Colour	Art.No
Indoor 180-R covering not included	-	92665
Frame IP20 Indoor 180	anthracite	92634

Technical data

Voltage:	110 – 240 V AC 50 / 60 Hz
Dimensions:	covering not included 70 x 70 x 61 mm
Power consumption:	approx. 0.5 W
Detection area:	horizontal 180° (Wall mounting)
Range:	max. 10 m across max. 3 m towards
Monitored area (tangential movement):	150 m² / 1.1 m mounting height
Mounting height min./max./recommended:	1 m / 2.2 m / 1.1 m
Degree / class of protection:	IP20 / Class II
Impact strength:	IK05
Ambient temperature:	-25 °C to +50 °C
Housing:	polycarbonate, UV-resistant
Material color:	**anthracite mat, similar to RAL7021 (92634)**
Channel 1 (lighting control)	
Switching power:	2300 W, cos φ = 1 1150 VA, cos φ = 0.5 800 W LED max. inrush current Ip (20 ms) = 165 A max. inrush current Ip (200 µs) = 800 A
Type of contact (k):	1x µ-contact, NO contact with tungsten pre-make contact
Follow-up time:	15 sec – 16 min, Pulse
Switch-on threshold:	10 – 2000 Lux

Product information

Set : Indoor 180-R covering not included + Frame IP20 Indoor 180 anthracite mat, similar to RAL7021

Wall motion detector with acoustic sensor

Relay version with three-wire technology

Acoustic sensor independently adjustable

Noise automatically extends follow-up time

Manual switching via push-button possible

Available with covering (centre plate dimensions 60 x 60 mm) or without covering for use with covering (centre plate dimensions 50 x 50 mm) in 5 different colours

In combination with centre plates usable with current frame systems of various manufacturers

B.E.G. frames and centre plates for combination with other frame systems available

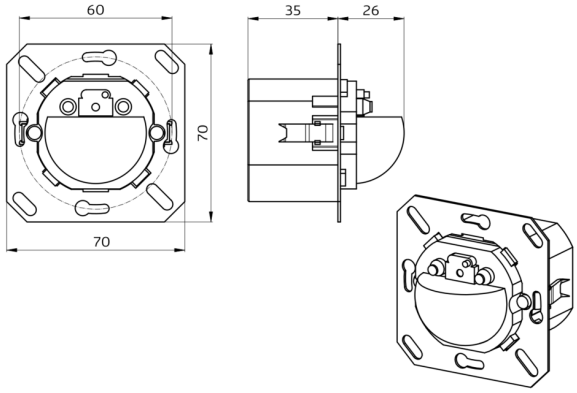
60
35
26
70
70

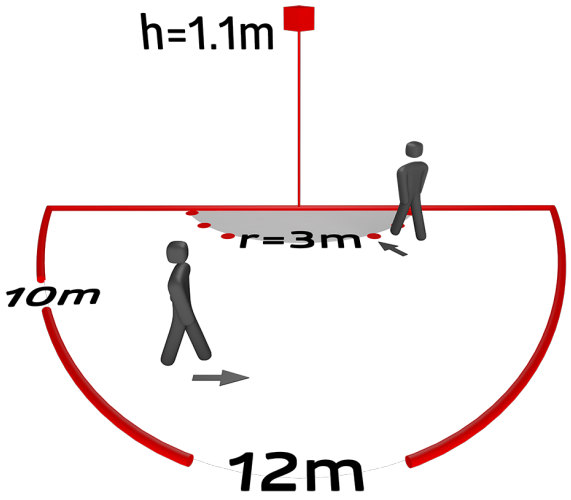
h=1.1m
r=3m
10m
12m

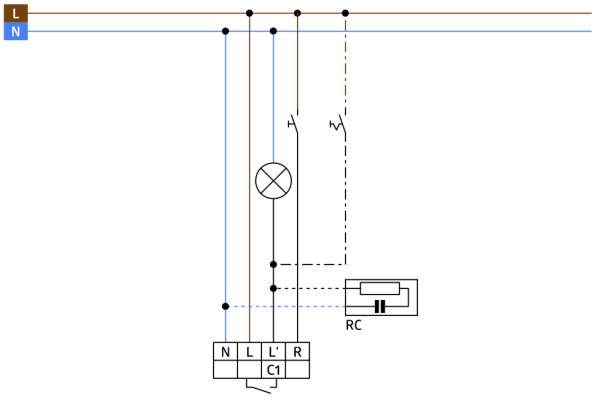
L
N
RC
N
L
L'
R
C1

Set items

To receive the bundle according to the technical specification, please order the items listed.



Indoor 180-R covering not included
Art.No: 92665

Voltage: 110 – 240 V AC 50 / 60 Hz
Dimensions: covering not included 70 x 70 x 61 mm
Power consumption: approx. 0.5 W



Frame IP20 Indoor 180
Art.No: 92634

Dimensions: 86 x 86 mm
Degree / class of protection: IP20
Housing: polycarbonate, UV-resistant