B.E.G. LUXOMAT®



# Indoor 180-S covering included

92135 EAN: 4007529921355

Slave PIR wall-mounted motion detector with 180° coverage and a range of up to 10 m (150 m²), for expanding the detection zone

## Order data

| Designation | Colour | Art.No |
|---|---|---|
| Indoor 180-S covering included | pure white | 92135 |

## Accessories

| Designation | Colour | Art.No |
|---|---|---|
| Frame IP20 Indoor 180 | pure white | 92630 |
| Frame IP20 Indoor 180 | traffic white | 92631 |
| Frame IP20 Indoor 180 | anthracite | 92634 |
| Frame IP54 Indoor 180 | pure white | 92139 |
| Frame IP20 Indoor 180 | oyster white | 92632 |
| Frame IP20 Indoor 180 | silver | 92633 |
| Surface mounting socket Indoor 180 | pure white | 92141 |
| Central plate Indoor 180 45x45 | traffic white | 38947 |
| Central plate Indoor 180 45x45 | oyster white | 39076 |
| Central plate Indoor 180 55 x 55 mm | pure white | 39222 |
| Central plate Indoor 180 55 x 55 mm | traffic white | 39223 |
| Central plate Indoor 180 55 x 55 mm | signal white | 39241 |

| | | |
|---|---|---|
| Central plate Indoor 180 55x55 | traffic white | 39242 |
| Central plate Indoor 180 S1 56x56 | pure white | 35126 |
| Central plate Indoor 180 56x56 modular2 | pure white | 35127 |
| Blinds Indoor 180 transparent | | 92294 |
| Blind Indoor 180 | | 33233 |
| protective cap Indoor 180 | | 92018 |

## Technical data

| | |
|---|---|
| Voltage: | 110 – 240 V AC 50 / 60 Hz |
| Dimensions: | covering included 87 x 87 x 61 mm |
| Power consumption: | approx. 0.2 W |
| Detection area: | horizontal 180° (Wall mounting) |
| Range: | max. 10 m across max. 3 m towards |
| Monitored area (tangential movement): | 150 m² / 1.1 m mounting height |
| Mounting height min./max./recommended: | 1 m / 2.2 m / 1.1 m |
| Degree / class of protection: | IP20 / Class II |
| Impact strength: | IK05 |
| Ambient temperature: | -25 °C to +50 °C |
| Housing: | polycarbonate, UV-resistant |
| Material color: | pure white mat, similar to RAL9010 |
| Pulse interval: | 2 or 9 sec |

## Product information

Slave device

For extending the detection area of a Master device

Compatible with 230 V devices. Concerning exceptions please see the respective master device.

Available with covering (centre plate dimensions 60 x 60 mm) or without covering for use with covering (centre plate dimensions 50 x 50 mm) in 5 different colours

In combination with centre plates usable with current frame systems of various manufacturers

B.E.G. frames and centre plates for combination with other frame systems available

**Application examples:** monitoring of public lavatories, corridors, archive rooms, conference rooms

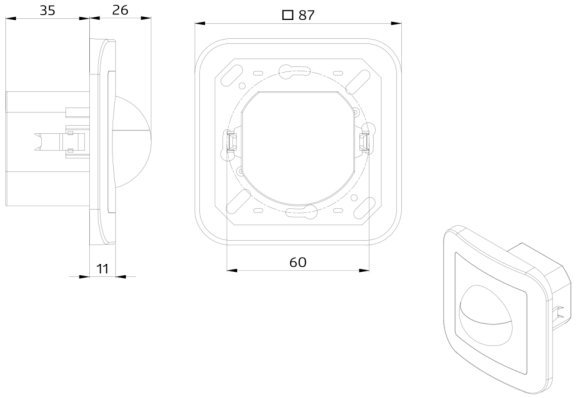
35
26
□ 87
11
60

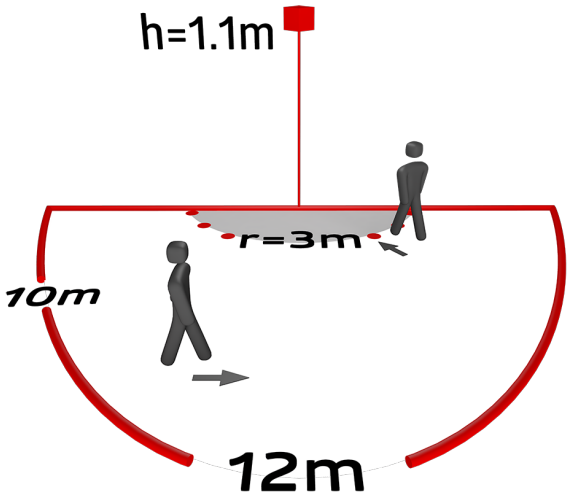
h=1.1m
r=3m
10m
12m

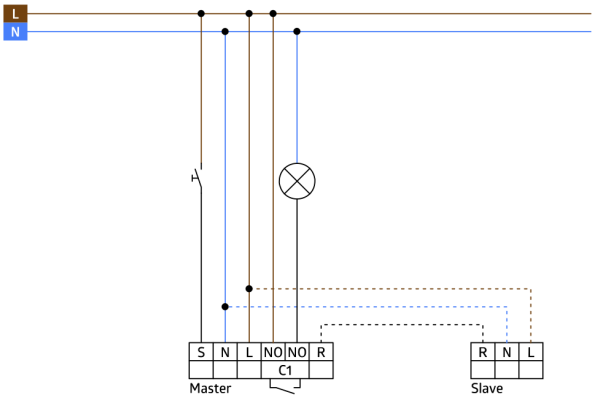
L
N
S
N
L
NO
NO
R
C1
Master
R
N
L
Slave

## Accessories



**Frame IP20 Indoor 180**
Art.No: 92630

Dimensions: 86 x 86 mm
Degree / class of protection: IP20
Housing: polycarbonate, UV-resistant



**Frame IP20 Indoor 180**
Art.No: 92631

Dimensions: 86 x 86 mm
Degree / class of protection: IP20
Housing: polycarbonate, UV-resistant



**Frame IP20 Indoor 180**
Art.No: 92634

Dimensions: 86 x 86 mm
Degree / class of protection: IP20
Housing: polycarbonate, UV-resistant



**Frame IP54 Indoor 180**
Art.No: 92139

Dimensions: 87 x 87 mm
Degree / class of protection: IP54
Housing: polycarbonate, UV-resistant



**Frame IP20 Indoor 180**
Art.No: 92632

Dimensions: 86 x 86 mm
Degree / class of protection: IP20
Housing: polycarbonate, UV-resistant



**Frame IP20 Indoor 180**
Art.No: 92633

Dimensions: 86 x 86 mm
Degree / class of protection: IP20
Housing: polycarbonate, UV-resistant



**Surface mounting socket Indoor 180**
Art.No: 92141

Dimensions: 88 x 88 x 42 mm
Degree / class of protection: IP54
Impact strength: IK05



**Central plate Indoor 180 45x45**
Art.No: 38947

Dimensions: 45 x 45 mm
Material color: traffic white mat, similar to RAL9016



**Central plate Indoor 180 45x45**
Art.No: 39076

Dimensions: 45 x 45 mm
Housing: polycarbonate, UV-resistant
Material color: oyster white mat, similar to RAL1013

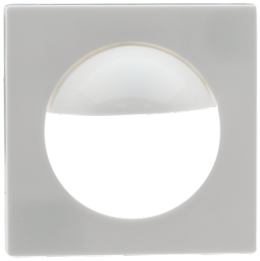

**Central plate Indoor 180 55 x 55 mm**
Art.No: 39222

Dimensions: 55 x 55 mm
Housing: polycarbonate, UV-resistant
Material color: pure white glossy, similar to RAL9010



**Central plate Indoor 180 55 x 55 mm**
Art.No: 39223

Dimensions: 55 x 55 mm
Housing: polycarbonate, UV-resistant
Material color: traffic white glossy



**Central plate Indoor 180 55 x 55 mm**
Art.No: 39241

Dimensions: 55 x 55 mm
Housing: polycarbonate, UV-resistant
Material color: signal white glossy, similar to RAL9003



**Central plate Indoor 180 55x55**
Art.No: 39242

Dimensions: 55 x 55 mm
Housing: polycarbonate, UV-resistant
Material color: traffic white glossy, similar to RAL9016



**Central plate Indoor 180 S1 56x56**
Art.No: 35126

Dimensions: 56 x 56 mm
Housing: polycarbonate, UV-resistant
Material color: pure white glossy, similar to RAL9010



**Central plate Indoor 180 56x56 modular2**
Art.No: 35127

Dimensions: 56 x 56 mm
Housing: polycarbonate, UV-resistant
Material color: pure white glossy, similar to RAL9010



**Blinds Indoor 180 transparent**
Art.No: 92294

Housing: polycarbonate, UV-resistant



**Blind Indoor 180**
Art.No: 33233

Housing: polycarbonate, UV-resistant
Material color: white



**protective cap Indoor 180**
Art.No: 92018

Dimensions: 56 x 56 mm
Housing: polycarbonate, UV-resistant
Material color: pure white glossy, similar to RAL9010