B.E.G. LUXOMAT®



# Indoor 180-S covering included Set 92135-92630-92141

Slave PIR wall-mounted motion detector with 180° coverage and a range of up to 10 m (150 m²), for expanding the detection zone

## Order data

| Designation | Colour | Art.No |
|---|---|---|
| Indoor 180-S covering included | pure white | 92135 |
| Frame IP20 Indoor 180 | pure white | 92630 |
| Surface mounting socket Indoor 180 | pure white | 92141 |

## Technical data

| | |
|---|---|
| Voltage: | 110 – 240 V AC 50 / 60 Hz |
| Dimensions: | **88 x 88 x 42 mm (92141)** |
| Power consumption: | approx. 0.2 W |
| Detection area: | horizontal 180° (Wall mounting) |
| Range: | max. 10 m across<br>max. 3 m towards |
| Monitored area (tangential movement): | 150 m² / 1.1 m mounting height |
| Mounting height min./max./recommended: | 1 m / 2.2 m / 1.1 m |
| Degree / class of protection: | **IP54 (92141)** |
| Impact strength: | IK05 |
| Ambient temperature: | -25 °C to +50 °C |
| Housing: | polycarbonate, UV-resistant |
| Material color: | **pure white mat, similar to RAL9010 (92630)** |
| Pulse interval: | 2 or 9 sec |

## Product information

Set : Indoor 180-S covering included + Frame IP20 Indoor 180 pure white mat, similar to RAL9010 + Surface mounting socket Indoor 180 pure white mat, similar to RAL9010

Slave device

For extending the detection area of a Master device

Compatible with 230 V devices. Concerning exceptions please see the respective master device.

Available with covering (centre plate dimensions 60 x 60 mm) or without covering for use with covering (centre plate dimensions 50 x 50 mm) in 5 different colours

In combination with centre plates usable with current frame systems of various manufacturers

B.E.G. frames and centre plates for combination with other frame systems available

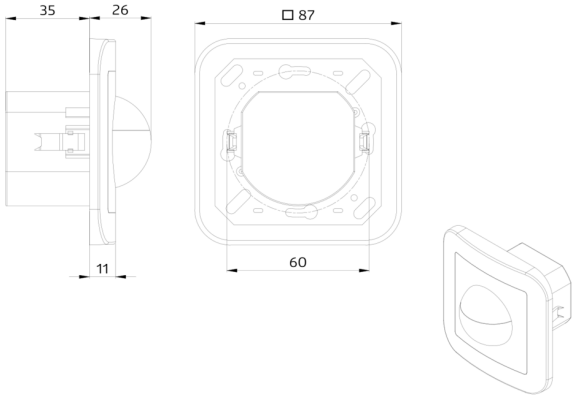
35
26
□ 87
11
60

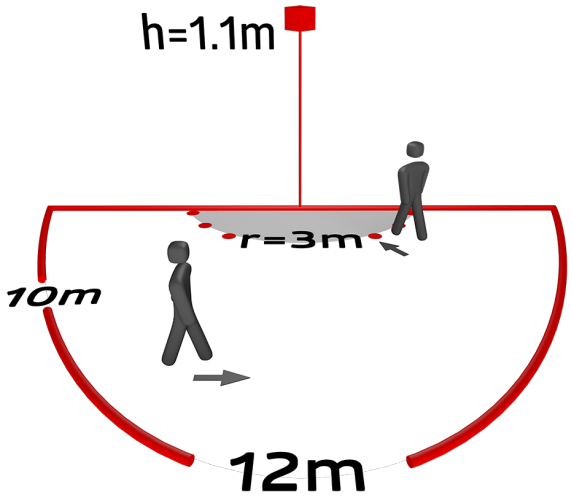
h=1.1m
r=3m
10m
12m

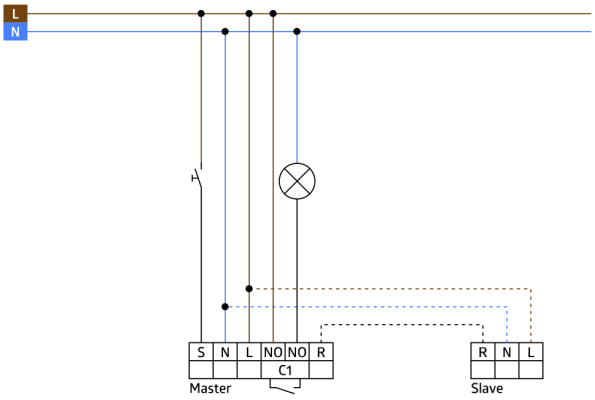
L
N
S
N
L
NO
NO
R
C1
Master
R
N
L
Slave

## Set items

To receive the bundle according to the technical specification, please order the items listed.



**Indoor 180-S covering included**
Art.No: 92135

Voltage: 110 – 240 V AC 50 / 60 Hz
Dimensions: covering included 87 x 87 x 61 mm
Power consumption: approx. 0.2 W



**Frame IP20 Indoor 180**
Art.No: 92630

Dimensions: 86 x 86 mm
Degree / class of protection: IP20
Housing: polycarbonate, UV-resistant



**Surface mounting socket Indoor 180**
Art.No: 92141

Dimensions: 88 x 88 x 42 mm
Degree / class of protection: IP54
Impact strength: IK05