B.E.G. LUXOMAT®



Indoor 180-TR covering included Set 92650-92630

230V PIR wall-mounted motion detector with 180° detection angle and a range of up to 10 meters (150 m²), featuring an acoustic sensor for staircase lighting control

Order data

Designation	Colour	Art.No
Indoor 180-TR covering included	pure white	92650
Frame IP20 Indoor 180	pure white	92630

Areas of application

- staircases

Technical data

Voltage:	110 – 240 V AC 50 / 60 Hz Power supply via staircase switch
Dimensions:	covering included 87 x 87 x 61 mm
Power consumption:	approx. 0.8 W
Detection area:	horizontal 180° (Wall mounting)
Range:	max. 10 m across max. 3 m towards
Monitored area (tangential movement):	150 m² / 1.1 m mounting height
Mounting height min./max./recommended:	1 m / 2.2 m / 1.1 m
Degree / class of protection:	IP20 / Class II
Impact strength:	IK05
Ambient temperature:	-25 °C to +50 °C
Housing:	polycarbonate, UV-resistant
Material color:	**pure white mat, similar to RAL9010 (92630)**
Channel 1	
Switching power:	0.2 A / 230 V
Follow-up time:	Pulse duration: 0.1 s; Deactivation of light evaluation 1 min – 10 min
Switch-on threshold:	2 – 2000 Lux

Product information

Set : Indoor 180-TR covering included + Frame IP20 Indoor 180 pure white mat, similar to RAL9010

Wall motion detector designed for stair light timer switches

Triac version with 2-wire technology, no neutral

Guarantees correct operation with the SCT1 (max. 10 sensors per unit)

Available with covering (centre plate dimensions 60 x 60 mm) or without covering for use with covering (centre plate dimensions 50 x 50 mm) in 5 different colours

In combination with centre plates usable with current frame systems of various manufacturers

B.E.G. frames and centre plates for combination with other frame systems available

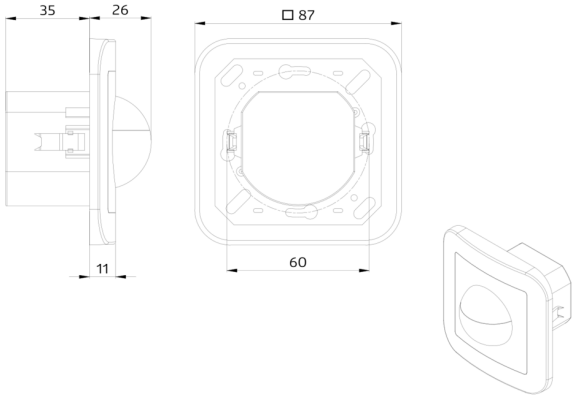
35
26
□ 87
11
60

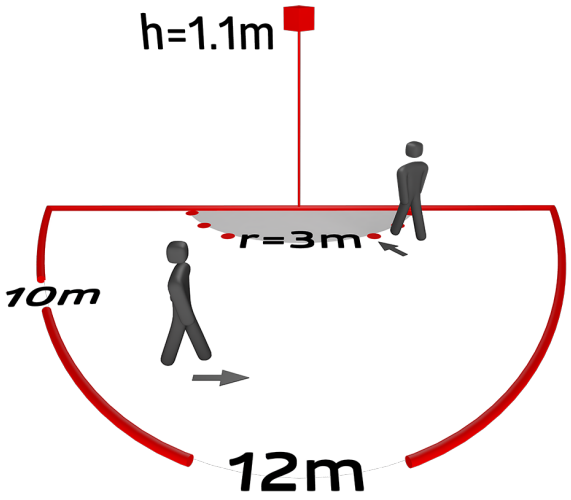
h=1.1m
r=3m
10m
12m

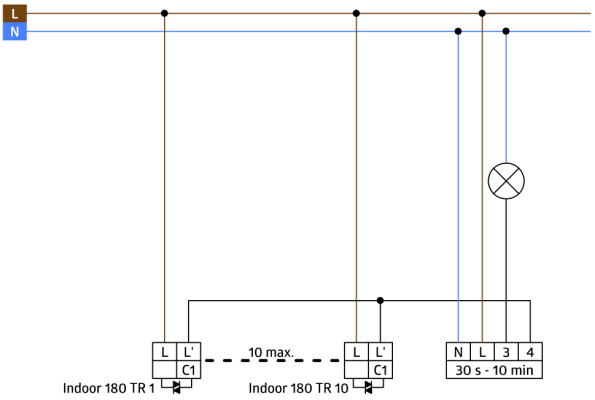
L
N
L
L'
C1
10 max.
L
L'
C1
N
L
3
4
30 s - 10 min
Indoor 180 TR 1
Indoor 180 TR 10

Set items

To receive the bundle according to the technical specification, please order the items listed.



Indoor 180-TR covering included
Art.No: 92650

Voltage: 110 – 240 V AC 50 / 60 Hz Power supply via staircase switch
Dimensions: covering included 87 x 87 x 61 mm
Power consumption: approx. 0.8 W



Frame IP20 Indoor 180
Art.No: 92630

Dimensions: 86 x 86 mm
Degree / class of protection: IP20
Housing: polycarbonate, UV-resistant