B.E.G. LUXOMAT®

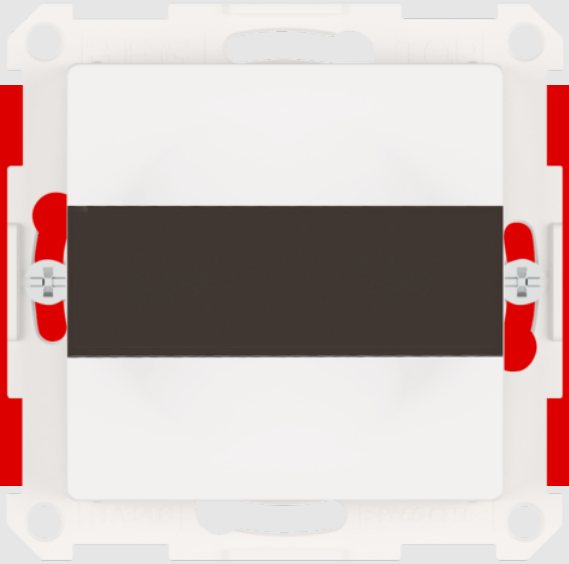

IndoorHF-M-1C

93261 EAN: 4007529932610

230V RF wall-mounted motion detector with 180° coverage and a detection area of 8x4m (32 m²), RF frequency 60 GHz

Order data

Designation	Colour	Art.No
IndoorHF-M-1C	traffic white	93261

Areas of application

- entrance halls
- corridors/hallways
- staircases
- toilets
- equipment rooms

Accessories

Designation	Colour	Art.No
BLE-IR-Adapter	black	93067

Technical data

Voltage:	230 V AC 10% 50 / 60 Hz
Dimensions:	55 x 55 x 36 mm
Power consumption:	approx. 0.2 W
Detection area:	horizontal 180° (Wall mounting)
Range:	max. 8 m x 4 m across max. 8 m x 4 m towards
Monitored area (tangential movement):	32 m² / 1.1 m mounting height
Mounting height min./max./recommended:	1 m / 3 m / 1.1 m
Degree / class of protection:	IP20 / Class II
Impact strength:	IK05
Ambient temperature:	5 °C to +50 °C
Housing:	polycarbonate, UV-resistant
Material color:	traffic white mat, similar to RAL9016
Channel 1 (lighting control)	
Switching power:	2300 W, cos φ = 1 1150 VA, cos φ = 0.5 800 W LED max. inrush current Ip (20 ms) = 165 A
Type of contact (k):	1x µ-contact, NO contact
Follow-up time:	10 sec – 30 min, Pulse
Brightness set value:	10 – 2500 Lux
Radar / HF technology:	60 GHz

Product information

Wall-mounted presence detector with HF technology

Relay version with three-wire technology

Manual switching via push-button possible

Available without frame for combination with cover frame (inner cover dimensions 55 x 55 mm)

Factory setting 10 min follow-up time and 500 lux brightness set value

Application examples:
entrance halls, corridors/hallways, staircases, toilets, equipment rooms

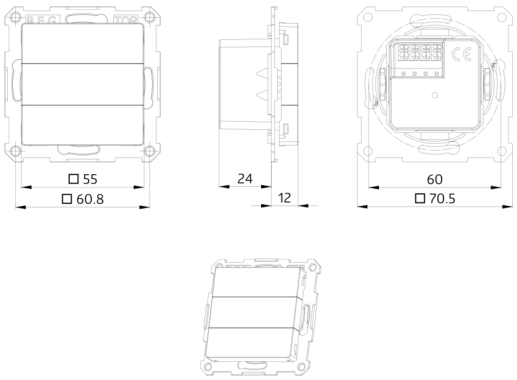
55
60.8
24
12
60
70.5

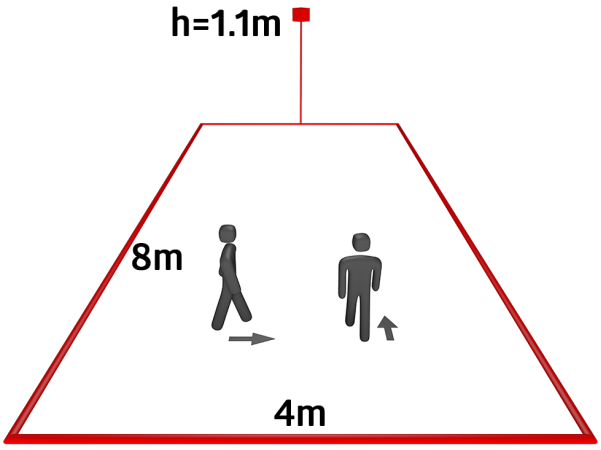
h=1.1m
8m
4m

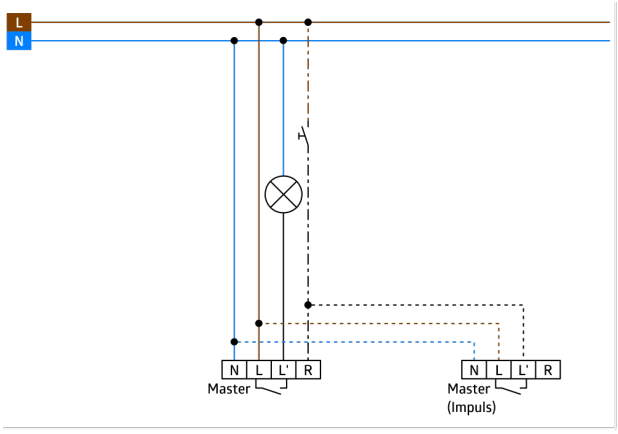
L
N
N L L' R
Master
N L L' R
Master
(Impuls)

Accessories



BLE-IR-Adapter
Art.No: 93067

Dimensions: 40 x 55 x 103 mm
Material color: black
Frequency: 2.4 GHz ISM band, GFSK 0.2 dBm + 5.3 dBi = 5.5 dBm