B.E.G. LUXOMAT® net



PD11-BMS-FLAT-FC DALI-2 Set 93542-92833-92692

DALI-2 (BMS) PIR multisensor with 360° detection and a range of up to Ø9m (63 m²), DALI-2 input device

Order data

Designation	Colour	Art.No
PD11-BMS-FLAT-FC DALI-2	white	93542
In-wall mounting set / PD11	white	92833
Cover ring PD11	white	92692

Technical data

Voltage:	via DALI Bus, max. 22.5 V DC
Dimensions:	**Ø 52 x 48 mm + Ø 104 mm (92833) + Ø 100 x 3 mm (92692)**
Settings:	via DALI-Bus and application which supports DALI multisensors according to IEC62386, parts 101, 103, 303 and 304
Typ. power input:	7 mA
Settling time:	200 ms
Detection area:	horizontal 360° (Ceiling mounting)
Range:	max. Ø 9 m across max. Ø 6 m towards max. Ø 3 m seated
Monitored area (tangential movement):	63 m² / 2.5 m mounting height
Mounting height min./max./recommended:	2 m / 5 m / 2.5 m
Degree / class of protection:	IP20 / Class II
Impact strength:	IK02
Measured light output:	0 - 4095 Lux, Mixed light measuring
Ambient temperature:	-25 °C to +50 °C
Housing:	polycarbonate, UV-resistant
Material color:	**white mat, similar to RAL9010 (92692)**

Product information

Set : PD11-BMS-FLAT-FC DALI-2 + In-wall mounting set / PD11 white + Cover ring PD11 white mat, similar to RAL9010

Low profile DALI-2 multisensor (input device) having a visible height of only 0.85 mm

DALI-2 certified product

Powered via DALI bus

DALI multimaster technology according to IEC 62386 part 103

Instance 0 provides information regarding occupancy and movement for the DALI-Bus according to IEC 62386 part 303

Instance 1 provides LUX values for the DALI-Bus according to IEC 62386 part 304

Parameterisation is possible via mandatory Multimaster-Application-Controller of any manufacturer. This controller must support IEC 62386 parts 101/103/303/304.

Spring clips for quick and easy installation in suspended ceilings

Includes blinds and clamp ring for installation into light fittings

With accessories for flush-mounting in ceiling and exposed concrete

Individual adaption of the PIR sensor sensitivity

Status LEDs can be activated / deactivated

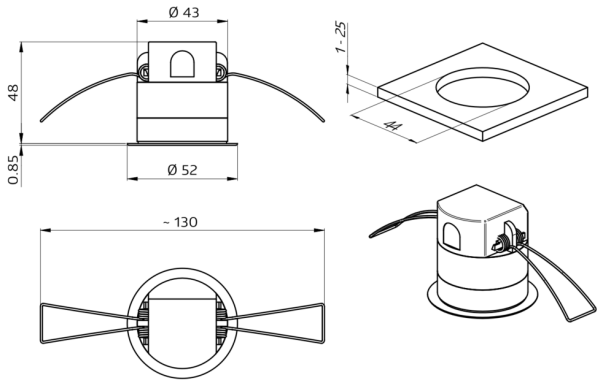
Ø 43
48
0.85
Ø 52
1 - 25
44
~ 130

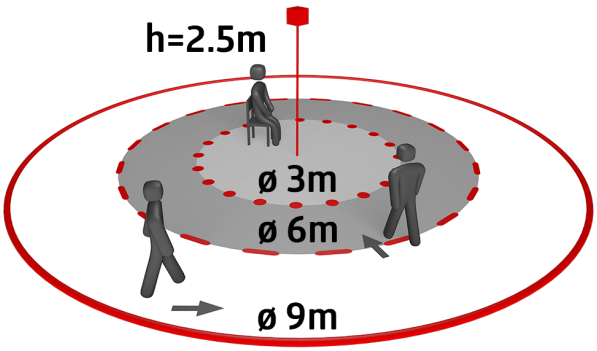
h=2.5m
ø 3m
ø 6m
ø 9m

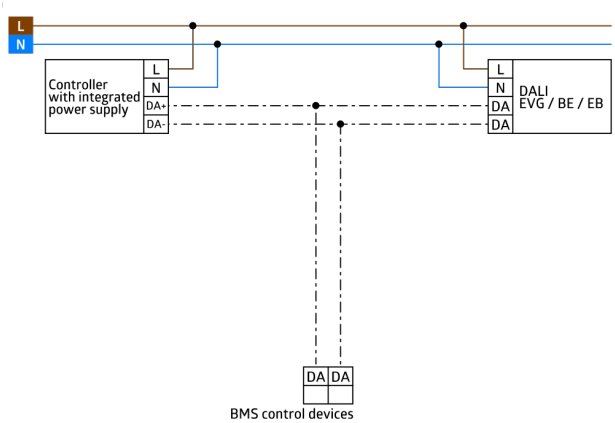
L
N
Controller
with integrated
power supply
L
N
DA+
DA-
L
N
DA
DA
DALI
EVG / BE / EB
DA
DA
BMS control devices

Set items

To receive the bundle according to the technical specification, please order the items listed.



PD11-BMS-FLAT-FC DALI-2
Art.No: 93542

Voltage: via DALI Bus, max. 22.5 V DC
Dimensions: Ø 52 x 48 mm
Settings: via DALI-Bus and application which supports DALI multisensors according to IEC62386, parts 101, 103, 303 and 304



In-wall mounting set / PD11
Art.No: 92833

Dimensions: Ø 104 mm
Material color: white

Cover ring PD11
Art.No: 92692

Dimensions: Ø 100 x 3 mm
Housing: polycarbonate, UV-resistant
Material color: white mat, similar to RAL9010