B.E.G. LUXOMAT® net




# PD11-DALI-LINK-FLAT-FC
# Set 93068-92833-92692

DALI-LINK PIR multisensor with 360° detection and a range of up to Ø9m (63 m²), for integration into DALI-LINK lighting control systems

## Order data

| Designation | Colour | Art.No |
|---|---|---|
| PD11-DALI-LINK-FLAT-FC | white | 93068 |
| In-wall mounting set / PD11 | white | 92833 |
| Cover ring PD11 | white | 92692 |

## Technical data

| | |
|---|---|
| Voltage: | via DALI Bus, max. 22.5 V DC |
| Dimensions: | **Ø 52 x 48 mm + Ø 104 mm (92833) + Ø 100 x 3 mm (92692)** |
| Settings: | PBM-DALI-LINK-4W-BLE + Smartphone with DALI-LINK App (iOS / Android) |
| Typ. power input: | 4 mA |
| Power consumption: | 0.1 W |
| Detection area: | horizontal 360° (Ceiling mounting) |
| Range: | max. Ø 9 m across<br>max. Ø 6 m towards<br>max. Ø 3 m seated |
| Monitored area (tangential movement): | 63 m² / 2.5 m mounting height |
| Mounting height min./max./recommended: | 2 m / 5 m / 2.5 m |
| Degree / class of protection: | IP20 / Class II |
| Impact strength: | IK02 |
| Ambient temperature: | -25 °C to +50 °C |
| Housing: | polycarbonate, UV-resistant |
| Material color: | **white mat, similar to RAL9010 (92692)** |
| Connections and wires: | 0.5 – 2.5 mm² for solid conductors |
| Follow-up time: | 1 sec – 120 min |
| Orientation light: | 5 – 100 % / 1 min – 120 min / ∞ |
| Brightness set value: | 10 – 2500 Lux |

## Product information

Set : PD11-DALI-LINK-FLAT-FC + In-wall mounting set / PD11 white + Cover ring PD11 white mat, similar to RAL9010

Low profile DALI multisensor (visible height: 0,85 mm)

Powered via DALI bus

Seemless integration in DALI lighting control system B.E.G. LUXOMAT®net DALI-LINK as modular multimaster option

Detection area can be extended thanks to master-slave-mode

Measuring of mixed light thanks to internal light sensor

Semi-automatic, full-automatic or twilight switch mode

Integrated daylight harvesting circuit (or switch output)

Guided Light, Soft-Start PLUS, Orientation light PLUS

Works out-of-the box for easy installation check

Full range of functions can only be activated with other products of the product group B.E.G. LUXOMAT®net DALI-LINK

Spring clips for quick and easy installation in suspended ceilings

Includes blinds and clamp ring for installation into light fittings

Flush mounting with accessory 92833, surface mounting with accessories 92833 and 92121

This article is a component of a lighting control system from B.E.G., which supports the use of DALI control gear (luminaires, relays) from other manufacturers

The use of DALI application controllers from other manufacturers is not supported

The use of DALI input devices (sensors, push-buttons) from other manufacturers is not supported

Additional system components (hardware) from B.E.G. are required

Additional free software from B.E.G. is required

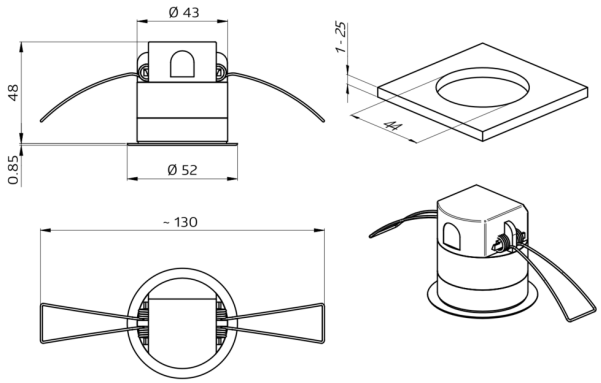
Ø 43
48
0.85
Ø 52
1 - 25
44
~ 130

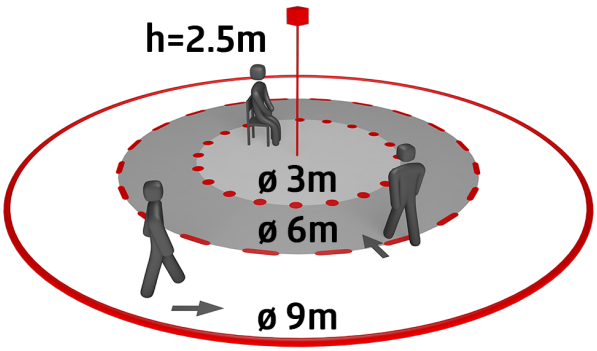
h=2.5m
ø 3m
ø 6m
ø 9m

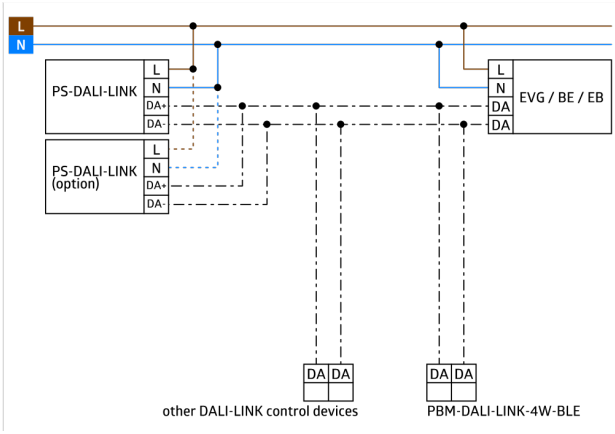
L
N
PS-DALI-LINK
L
N
DA+
DA-
PS-DALI-LINK (option)
L
N
DA+
DA-
L
N
DA
DA
EVG / BE / EB
DA DA
other DALI-LINK control devices
DA DA
PBM-DALI-LINK-4W-BLE

## Set items

To receive the bundle according to the technical specification, please order the items listed.



**PD11-DALI-LINK-FLAT-FC**
Art.No: 93068

Voltage: via DALI Bus, max. 22.5 V DC
Dimensions: Ø 52 x 48 mm
Settings: PBM-DALI-LINK-4W-BLE + Smartphone with DALI-LINK App (iOS / Android)



**In-wall mounting set / PD11**
Art.No: 92833

Dimensions: Ø 104 mm
Material color: white



**Cover ring PD11**
Art.No: 92692

Dimensions: Ø 100 x 3 mm
Housing: polycarbonate, UV-resistant
Material color: white mat, similar to RAL9010