B.E.G. LUXOMAT® net



PD11-KNXs-FLAT-ST-FC
Set 93522-92994

KNX PIR motion detector (standard) with 360° detection and a range of up to Ø9m (63 m²)

Order data

Designation	Colour	Art.No
PD11-KNXs-FLAT-ST-FC	white	93522
Square design frame PD11-FC	white	92994

Technical data

Voltage:	via KNX BUS
Dimensions:	**Ø 52 x 48 mm + 54 x 54 x 2.6 mm (92994)**
Typ. power input:	12 mA
Detection area:	horizontal 360° (Ceiling mounting)
Range:	max. Ø 9 m across max. Ø 6 m towards max. Ø 3 m seated
Monitored area (tangential movement):	63 m² / 2.5 m mounting height
Mounting height min./max./recommended:	2 m / 5 m / 2.5 m
Degree / class of protection:	IP54 / Class III
Impact strength:	IK02
Ambient temperature:	-25 °C to +55 °C
Housing:	polycarbonate, UV-resistant
Material color:	**white mat, similar to RAL9010 (92994)**
Number of light sensors:	1
Number of PIR sensors:	1
KNX TP 256:	Yes
KNX Secure:	Yes
Orientation light:	5 – 100 % / OFF / 1 min – 255 min
Night light:	5 – 100 %
Brightness set value:	5 – 2000 Lux

Product information

Set : PD11-KNXs-FLAT-ST-FC + Square design frame PD11-FC white mat, similar to RAL9010

Low profile KNX occupancy detector with integrated KNX bus connector

KNX Secure ready

Parameterisation from ETS 5 for integration into KNX systems

Individual adaption of the PIR sensor sensitivity

Mixed light measurement using internal and remote (optional) light sensors

Intelligent semi-automatic mode, occupancy-independent regulating mode (photoelectric switch), full automatic mode

1 x Light (for regulating or switching), 1 x slave output, 3 separate HVAC-blocs

Regulation of up to three lighting groups using offset (external influence possible)

Short presence, self-adjusting follow-up time, corridor function

Various locking functions

Soft-start

Recall of light scenes

Deactivatable status indicators

The product database for import into the ETS database can be downloaded from the B.E.G. homepage.

Detection area can be extended thanks to master-slave-mode

Extensive optimization options for light measurement

Measured light value is communicated to the bus

Adaption of dimming curve

Bidirectionally remote control-capable with the IR adapter and the B.E.G. smartphone app

PIN code

IR remote control-capable via IR remote control (optionally)

Programming button (phys. address) can be operated via remote control

HVAC mode (0=automatic, 1=comfort, 2=stand-by, 3=economy, 4=antifreeze/heat protection)

Manual influence via external KNX push buttons possible

Function control (heartbeat, cyclical sending)

Forced switch-off

Intelligent central-off function

Premonition of switch-off

Burn-in function for fluorescent lamps selectable from 1h till 100h

Behaviour upon bus voltage return definable at choice

Variable safety pause after switching off the lights

Flush mounting with accessory 92833, surface mounting with accessories 92833 and 92121

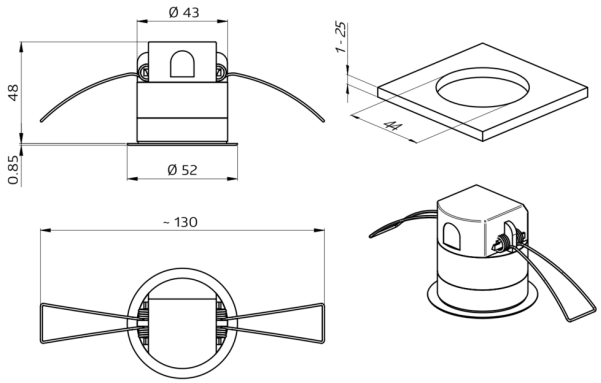
Ø 43
48
0.85
Ø 52
1-25
44
~ 130

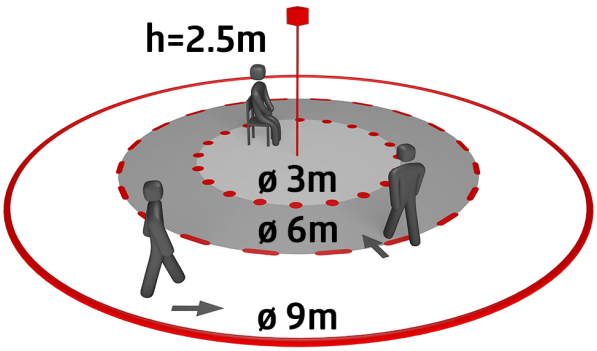
h=2.5m
ø 3m
ø 6m
ø 9m

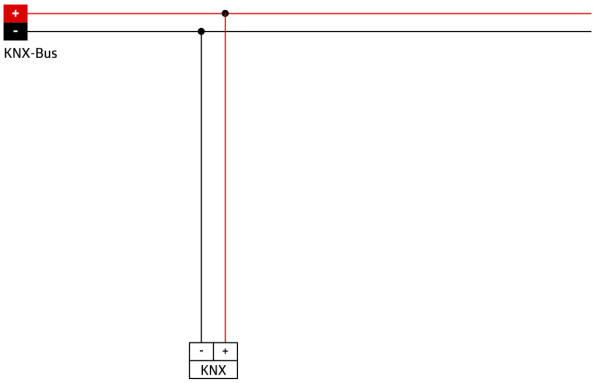
+
-
KNX-Bus
-
+
KNX

Set items

To receive the bundle according to the technical specification, please order the items listed.



PD11-KNXs-FLAT-ST-FC
Art.No: 93522

Voltage: via KNX BUS
Dimensions: Ø 52 x 48 mm
Typ. power input: 12 mA

Square design frame PD11-FC
Art.No: 92994

Dimensions: 54 x 54 x 2.6 mm
Housing: polycarbonate, UV-resistant
Material color: white mat, similar to RAL9010