PD11-M-1C-FLAT-FC Set 92583-92833



230V PIR motion detector with 360° detection and a range of up to Ø9m (63 m²), remote-controlled

Order data

Designation	Colour	Art.No
PD11-M-1C-FLAT-FC	white	92583
In-wall mounting set / PD11	white	92833

Areas of application

- entrance halls
- small offices
- corridors/hallways
- staircases
- open-plan offices
- conference rooms

Technical data

Voltage:	110 – 240 V AC 50 / 60 Hz
Dimensions:	**Ø 52 x 60 mm + Ø 104 mm (92833)**
Power consumption:	approx. 0.3 W
Detection area:	horizontal 360° (Ceiling mounting)
Range:	max. Ø 9 m across max. Ø 6 m towards max. Ø 3 m seated
Monitored area (tangential movement):	63 m² / 2.5 m mounting height
Mounting height min./max./recommended:	2 m / 5 m / 2.5 m
Degree / class of protection:	IP20 / Class II
Impact strength:	IK02
Ambient temperature:	-25 °C to +50 °C
Housing:	polycarbonate, UV-resistant
Material color:	white mat, similar to RAL9010
Channel 1 (lighting control)	
Switching power:	2300 W, cos φ = 1 1150 VA, cos φ = 0.5 800 W LED max. inrush current Ip (20 ms) = 165 A max. inrush current Ip (200 µs) = 800 A
Type of contact (k):	1x µ-contact, NO contact with tungsten pre-make contact
Follow-up time:	5 min – 30 min, Pulse
Switch-on threshold:	20 – 2000 Lux
Light measuring:	Mixed light measuring

Product information

Set : PD11-M-1C-FLAT-FC + In-wall mounting set / PD11 white

Particularly flat occupancy detector without additional power supply

Visible portion when built into ceiling: height 0.85 mm

One channel for light switching

Manual switching via push-button possible

Easy operation with remote control (required)

Version as master device

Detection area can be extended by using slave devices

Spring clips for quick and easy installation in suspended ceilings

Includes blinds and clamp ring for installation into light fittings

With accessories for flush-mounting in ceiling and exposed concrete

Factory settings 10 min and 500 lux

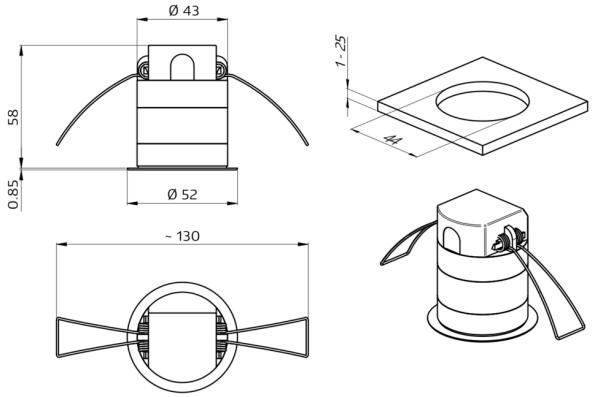
Ø 43
58
0.85
Ø 52
~ 130
1 - 25
44

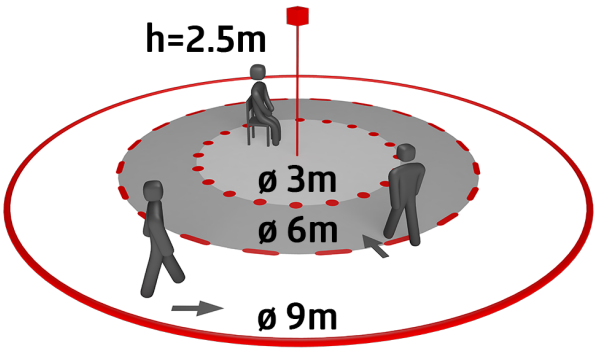
h=2.5m
ø 3m
ø 6m
ø 9m

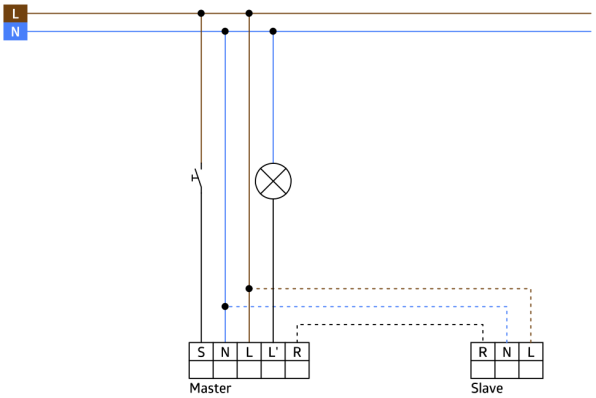
L
N
S N L L' R
Master
R N L
Slave

Set items

To receive the bundle according to the technical specification, please order the items listed.



PD11-M-1C-FLAT-FC
Art.No: 92583

Voltage: 110 – 240 V AC 50 / 60 Hz
Dimensions: Ø 52 x 60 mm
Power consumption: approx. 0.3 W



In-wall mounting set / PD11
Art.No: 92833

Dimensions: Ø 104 mm
Material color: white