B.E.G. LUXOMAT®

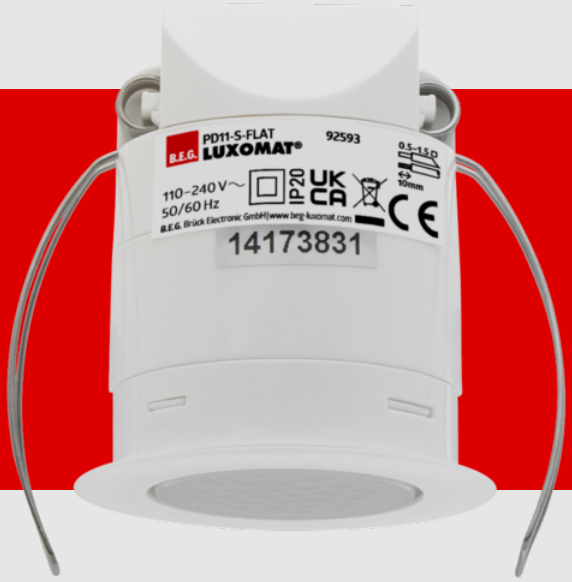


# PD11-S-FLAT-FC Set
# 92593-92833-92537

Slave PIR motion detector with 360° coverage and a range of up to Ø9m (63 m²)

## Order data

| Designation | Colour | Art.No |
|---|---|---|
| PD11-S-FLAT-FC | white | 92593 |
| In-wall mounting set / PD11 | white | 92833 |
| Cover ring PD11 (52 mm) | black | 92537 |

## Technical data

| | |
|---|---|
| Voltage: | 110 – 240 V AC 50 / 60 Hz |
| Dimensions: | **Ø 52 x 60 mm + Ø 104 mm (92833) + Ø 52 x 3 mm (92537)** |
| Power consumption: | approx. 0.2 W |
| Detection area: | horizontal 360° (Ceiling mounting) |
| Range: | max. Ø 9 m across<br>max. Ø 6 m towards<br>max. Ø 3 m seated |
| Monitored area (tangential movement): | 63 m² / 2.5 m mounting height |
| Mounting height min./max./recommended: | 2 m / 5 m / 2.5 m |
| Degree / class of protection: | IP20 / Class II |
| Impact strength: | IK02 |
| Ambient temperature: | -25 °C to +50 °C |
| Housing: | polycarbonate, UV-resistant |
| Material color: | **black, similar to RAL9005 (92537)** |
| Pulse interval: | 9 sec |

## Product information

Set : PD11-S-FLAT-FC + In-wall mounting set / PD11 white + Cover ring PD11 (52 mm) black, similar to RAL9005

Super flat slave device for connection to a master device

For extending the detection area of a Master device

Trigger pulse to master device upon detected movement independent of the ambient light level

Compatible with 230 V devices. Concerning exceptions please see the respective master device.

Spring clips for quick and easy installation in suspended ceilings

Includes blinds and clamp ring for installation into light fittings

With accessories for flush-mounting in ceiling and exposed concrete

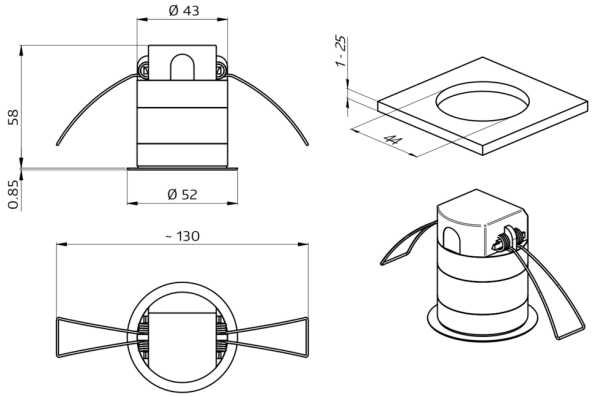
Ø 43
58
0.85
Ø 52
~ 130
1 - 25
44

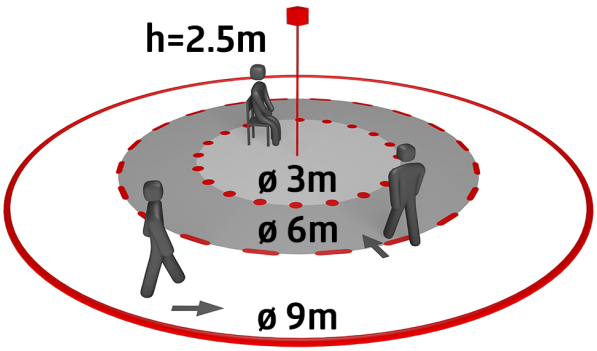
h=2.5m
ø 3m
ø 6m
ø 9m

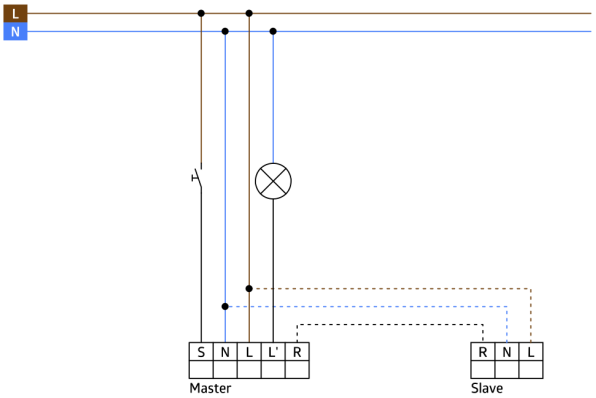
L
N
S N L L' R
Master
R N L
Slave

## Set items

To receive the bundle according to the technical specification, please order the items listed.




**PD11-S-FLAT-FC**
Art.No: 92593

Voltage: 110 – 240 V AC 50 / 60 Hz
Dimensions: Ø 52 x 60 mm
Power consumption: approx. 0.2 W



**In-wall mounting set / PD11**
Art.No: 92833

Dimensions: Ø 104 mm
Material color: white

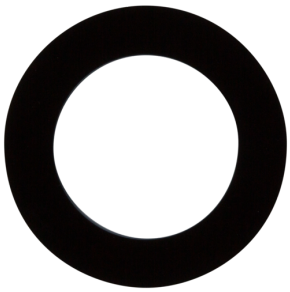

**Cover ring PD11 (52 mm)**
Art.No: 92537

Dimensions: Ø 52 x 3 mm
Housing: polycarbonate, UV-resistant
Material color: black, similar to RAL9005