B.E.G. LUXOMAT®

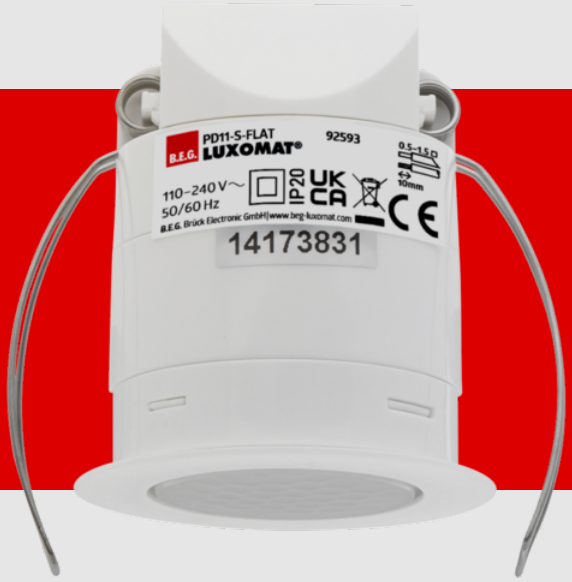

PD11-S-FLAT-FC Set 92593-92833-92692

Slave PIR motion detector with 360° coverage and a range of up to Ø9m (63 m²)

Order data

Designation	Colour	Art.No
PD11-S-FLAT-FC	white	92593
In-wall mounting set / PD11	white	92833
Cover ring PD11	white	92692

Technical data

Voltage:	110 – 240 V AC 50 / 60 Hz
Dimensions:	**Ø 52 x 60 mm + Ø 104 mm (92833) + Ø 100 x 3 mm (92692)**
Power consumption:	approx. 0.2 W
Detection area:	horizontal 360° (Ceiling mounting)
Range:	max. Ø 9 m across max. Ø 6 m towards max. Ø 3 m seated
Monitored area (tangential movement):	63 m² / 2.5 m mounting height
Mounting height min./max./recommended:	2 m / 5 m / 2.5 m
Degree / class of protection:	IP20 / Class II
Impact strength:	IK02
Ambient temperature:	-25 °C to +50 °C
Housing:	polycarbonate, UV-resistant
Material color:	**white mat, similar to RAL9010 (92692)**
Pulse interval:	9 sec

Product information

Set : PD11-S-FLAT-FC + In-wall mounting set / PD11 white + Cover ring PD11 white mat, similar to RAL9010

Super flat slave device for connection to a master device

For extending the detection area of a Master device

Trigger pulse to master device upon detected movement independent of the ambient light level

Compatible with 230 V devices. Concerning exceptions please see the respective master device.

Spring clips for quick and easy installation in suspended ceilings

Includes blinds and clamp ring for installation into light fittings

With accessories for flush-mounting in ceiling and exposed concrete

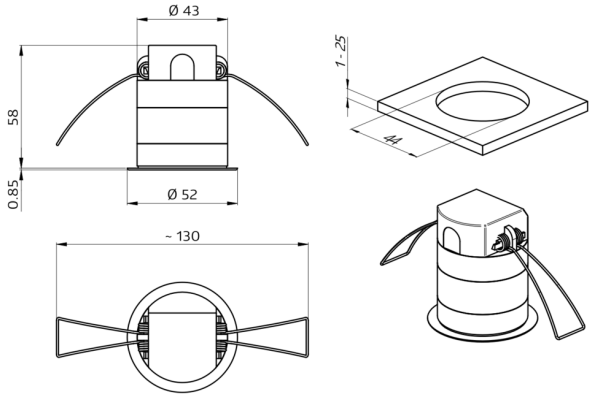
Ø 43
58
0.85
Ø 52
~ 130
1 - 25
44

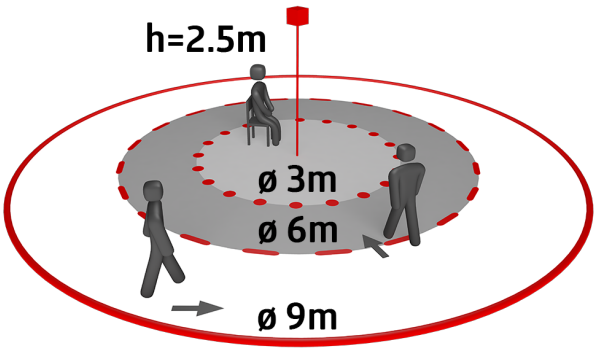
h=2.5m
ø 3m
ø 6m
ø 9m

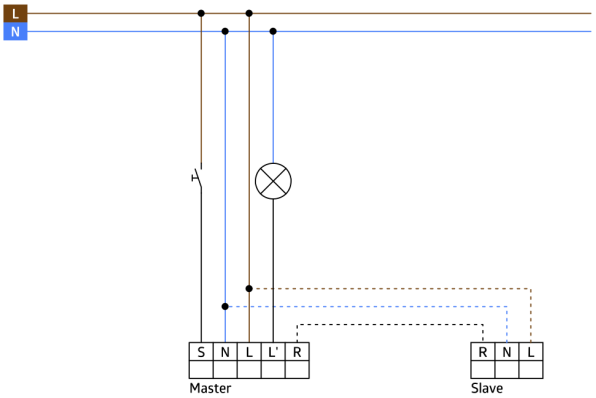
L
N
S N L L' R
Master
R N L
Slave

Set items

To receive the bundle according to the technical specification, please order the items listed.



PD11-S-FLAT-FC
Art.No: 92593

Voltage: 110 – 240 V AC 50 / 60 Hz
Dimensions: Ø 52 x 60 mm
Power consumption: approx. 0.2 W



In-wall mounting set / PD11
Art.No: 92833

Dimensions: Ø 104 mm
Material color: white

Cover ring PD11
Art.No: 92692

Dimensions: Ø 100 x 3 mm
Housing: polycarbonate, UV-resistant
Material color: white mat, similar to RAL9010