B.E.G. LUXOMAT®



PD2-M-1C-FC Set 92565-93085

230V PIR motion detector with 360° coverage and a range of up to Ø10m (78 m²), remote-controlled

Order data

Designation	Colour	Art.No
PD2-M-1C-FC	white	92565
Cover ring PD2/PD3 FC		93085

Areas of application

- equipment rooms
- small offices
- entrance halls
- corridors/hallways
- staircases
- toilets
- open-plan offices
- conference rooms

Technical data

Voltage:	110 – 240 V AC 50 / 60 Hz
Dimensions:	Ø 80 x 85 mm
Power consumption:	approx. 0.4 W
Detection area:	horizontal 360° (Ceiling mounting)
Range:	max. Ø 10 m across max. Ø 6 m towards max. Ø 4 m seated
Monitored area (tangential movement):	78 m² / 2.5 m mounting height
Mounting height min./max./recommended:	2 m / 5 m / 2.5 m
Degree / class of protection:	IP20 / Class II
Impact strength:	IK05
Ambient temperature:	-25 °C to +50 °C
Housing:	polycarbonate, UV-resistant
Material color:	**jet black glossy, similar to RAL9005 (93085)**
Channel 1 (lighting control, potential-free (dry))	
Switching power:	2300 W, cos φ = 1 1150 VA, cos φ = 0.5 800 W LED max. inrush current Ip (20 ms) = 165 A max. inrush current Ip (200 µs) = 800 A
Type of contact (k):	1x µ-contact, dry NO contact with tungsten pre-make contact
Follow-up time:	15 sec – 30 min, Pulse
Switch-on threshold:	10 – 2000 Lux
Light measuring:	Mixed light measuring

Product information

Set : PD2-M-1C-FC + Cover ring PD2/PD3 FC jet black glossy, similar to RAL9005

Occupancy detector with one potential-free dry contact

Version as master device

One channel for light switching

Detection area can be extended by using slave devices

Manual switching via push-button possible

Additional functions can be set up using the optional remote control.

Factory settings 10 min and 500 lux

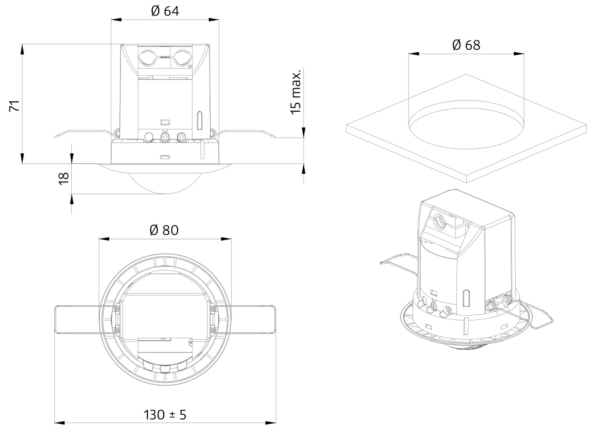
Ø 64
71
15 max.
18
Ø 80
130 ± 5
Ø 68

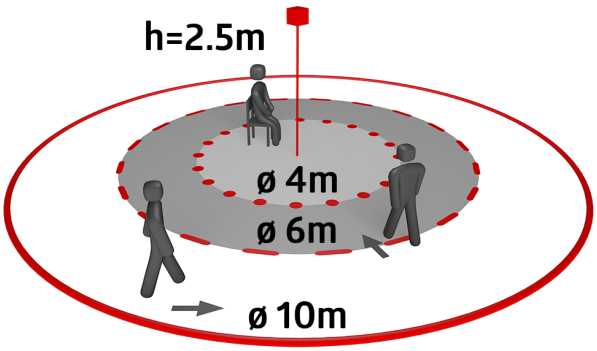
h=2.5m
ø 4m
ø 6m
ø 10m

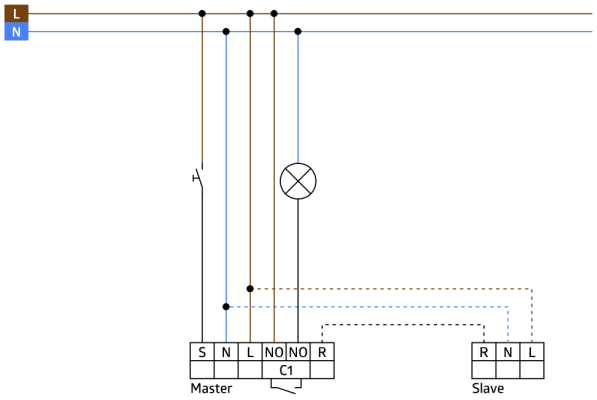
L
N
S
N
L
NO
NO
R
C1
Master
R
N
L
Slave

Set items

To receive the bundle according to the technical specification, please order the items listed.



PD2-M-1C-FC
Art.No: 92565

Voltage: 110 – 240 V AC 50 / 60 Hz
Dimensions: Ø 80 x 85 mm
Power consumption: approx. 0.4 W



Cover ring PD2/PD3 FC
Art.No: 93085

Dimensions: Ø 84 x 9 mm
Housing: polycarbonate, UV-resistant
Material color: jet black glossy, similar to RAL9005