B.E.G. LUXOMAT®



PD2-M-1C-SM Set
92550-92199-92441

230V PIR motion detector with 360° detection and a range of up to Ø10m (78 m²), remote-controlled

Order data

Designation	Colour	Art.No
PD2-M-1C-SM	white	92550
Wire basket BSK (Ø 200 x 90 mm)	white	92199
Wall holder PD4-SM	white	92441

Technical data

Voltage:	110 – 240 V AC 50 / 60 Hz
Dimensions:	**Ø 200 x 90 mm (92199) + 130 x 100 x 53 mm (92441)**
Power consumption:	approx. 0.4 W
Detection area:	horizontal 360° (Ceiling mounting)
Range:	max. Ø 10 m across max. Ø 6 m towards max. Ø 4 m seated
Monitored area (tangential movement):	78 m² / 2.5 m mounting height
Mounting height min./max./recommended:	2 m / 5 m / 2.5 m
Degree / class of protection:	IP20 / Class II
Impact strength:	**IK09 (92199)**
Ambient temperature:	-25 °C to +50 °C
Housing:	**polycarbonate, UV-resistant + coated steel basket (92199)**
Material color:	white mat, similar to RAL9010
Channel 1 (lighting control, potential-free (dry))	
Switching power:	2300 W, cos φ = 1 1150 VA, cos φ = 0.5 800 W LED max. inrush current Ip (20 ms) = 165 A max. inrush current Ip (200 µs) = 800 A
Type of contact (k):	1x µ-contact, dry NO contact with tungsten pre-make contact
Follow-up time:	15 sec – 30 min, Pulse
Switch-on threshold:	10 – 2000 Lux
Light measuring:	Mixed light measuring

Product information

Set : PD2-M-1C-SM + Wire basket BSK (Ø 200 x 90 mm) white + Wall holder PD4-SM white

Occupancy detector with one potential-free dry contact

Version as master device

One channel for light switching

Detection area can be extended by using slave devices

Manual switching via push-button possible

Additional functions can be set up using the optional remote control.

Factory settings 10 min and 500 lux

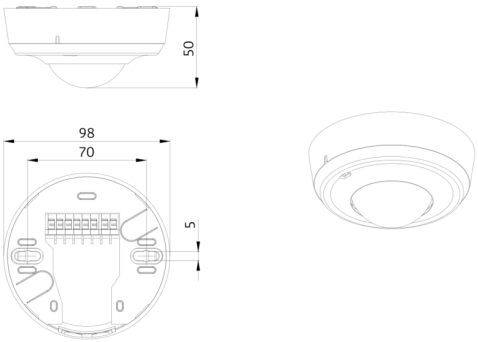
50
98
70
5

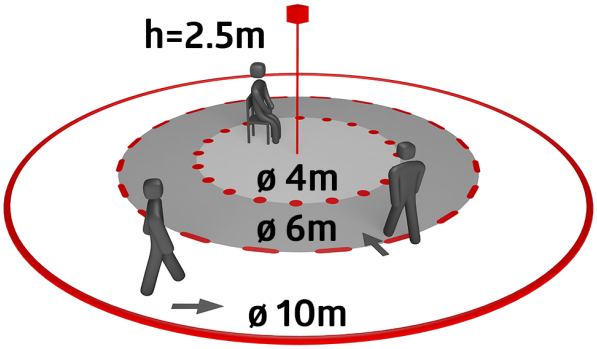
h=2.5m
ø 4m
ø 6m
ø 10m

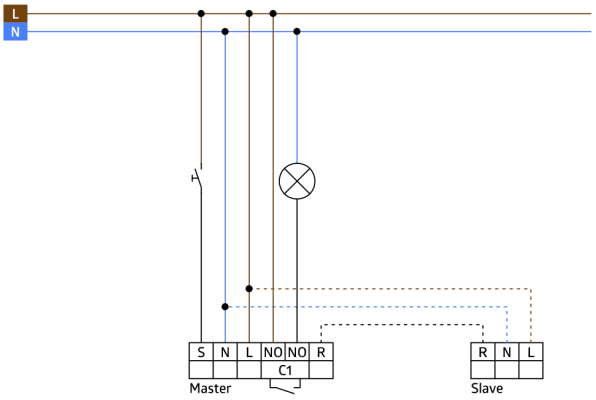
L
N
S
N
L
NO
NO
R
C1
Master
R
N
L
Slave

Set items

To receive the bundle according to the technical specification, please order the items listed.



PD2-M-1C-SM
Art.No: 92550

Voltage: 110 – 240 V AC 50 / 60 Hz
Dimensions: Ø 98 x 48 mm
Power consumption: approx. 0.4 W

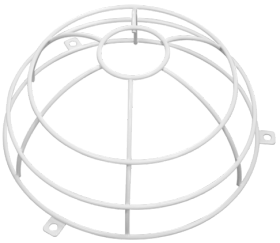

Wire basket BSK (Ø 200 x 90 mm)
Art.No: 92199

Dimensions: Ø 200 x 90 mm
Impact strength: IK09
Housing: coated steel basket

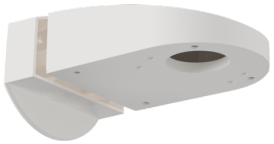

Wall holder PD4-SM
Art.No: 92441

Dimensions: 130 x 100 x 53 mm
Housing: polycarbonate, UV-resistant
Material color: white