B.E.G. LUXOMAT®



PD2-M-2C-12-48V-3A-SM

92154 EAN: 4007529921546

12–48 V 2-channel PIR motion detector with 360° detection and a range of up to Ø10m (78 m²), remote-controlled

Order data

Designation	Colour	Art.No
PD2-M-2C-12-48V-3A-SM	white	92154

Areas of application

- corridors/hallways
- toilets
- equipment rooms
- small offices
- open-plan offices
- conference rooms

Accessories

Designation	Colour	Art.No
BLE-IR-Adapter	black	93067
IR-PD-2C	-	92475
IR-PD-Mini	-	92159
Wire basket BSK (Ø 200 x 90 mm)	white	92199
SM socket IP54 for PD2- / PD4-SM	white	92161
Wall holder PD4-SM	white	92441
Blinds PD2-SM		92260
Pendulum mounting set PD2/3/4 SM	jet black	93193
Pendulum mounting set PD2/3/4 SM	white	93179

Technical data

Voltage:	12 – 48 V AC / DC
Dimensions:	Ø 98 x 47 mm
Power consumption:	< 1 W
Detection area:	horizontal 360° (Ceiling mounting)
Range:	max. Ø 10 m across max. Ø 6 m towards max. Ø 4 m seated
Monitored area (tangential movement):	78 m² / 2.5 m mounting height
Mounting height min./max./recommended:	2 m / 5 m / 2.5 m
Degree / class of protection:	IP20 / Class II
Impact strength:	IK05
Ambient temperature:	-25 °C to +50 °C
Housing:	polycarbonate, UV-resistant
Material color:	white mat, similar to RAL9010
Channel 1 (lighting control, potential-free (dry))	
Switching power:	3 A; cos φ = 1
Type of contact (k):	1x µ-contact, dry NO contact
Follow-up time:	15 sec – 30 min, Pulse
Brightness set value:	10 – 2000 Lux
Channel 2 (HVAC control potential-free (dry))	
Switching power:	3 A; cos φ = 1
Type of contact:	1x µ-contact, dry NO contact
Follow-up time:	5 min – 120 min, Alarm pulse, Pulse
Light measuring:	Mixed light measuring

Product information

Occupancy detector with operating voltage of 12-48 V

Two potential-free (dry) channels

Can be used as either Master device or Slave device

Manual switching via push-button possible

Additional functions can be set up using the optional remote control.

Factory settings 10 min and 500 lux (15 min HVAC)

Application examples:
corridors/hallways, toilets, equipment rooms, small offices, open-plan offices, conference rooms

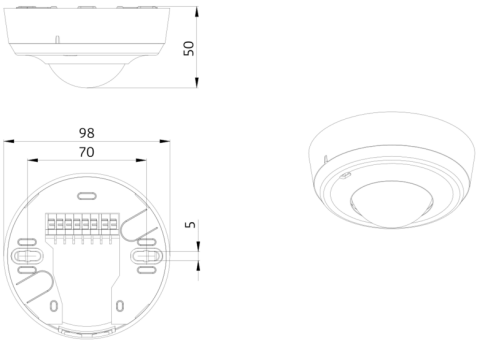
50
98
70
5

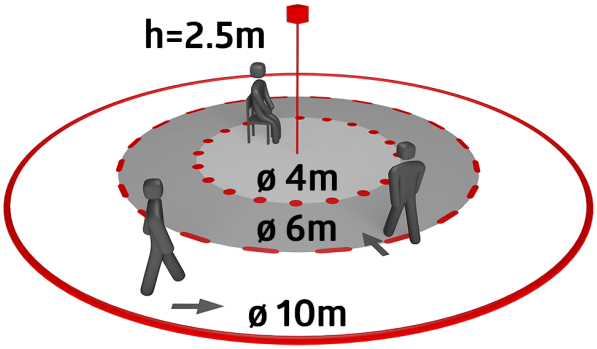
h=2.5m
ø 4m
ø 6m
ø 10m

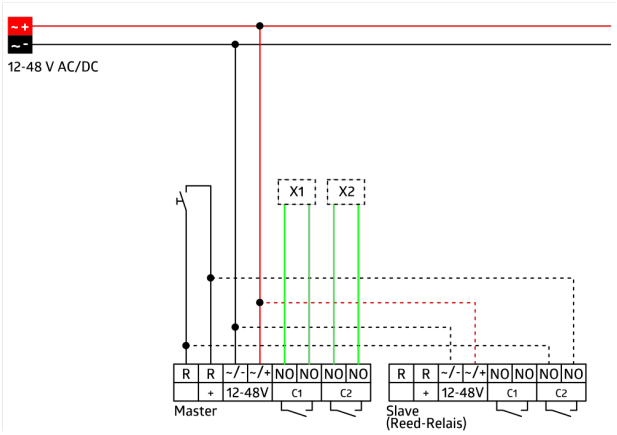
12-48 V AC/DC
X1
X2
R
R
-/-
-/+
NO
NO
NO
NO
+
12-48V
C1
C2
Master
Slave
(Reed-Relais)

Accessories



BLE-IR-Adapter
Art.No: 93067

Dimensions: 40 x 55 x 103 mm
Material color: black
Frequency: 2.4 GHz ISM band, GFSK
0.2 dBm + 5.3 dBi = 5.5 dBm

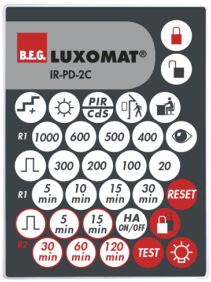

IR-PD-2C
Art.No: 92475

Battery: 3.0 V Lithium CR2032 (inclusive)
Dimensions: 80 x 60 x 8 mm
Material color: -



IR-PD-Mini
Art.No: 92159

Battery: 3.0 V Lithium CR2032 (inclusive)
Dimensions: 57 x 35 x 7 mm
Material color: -

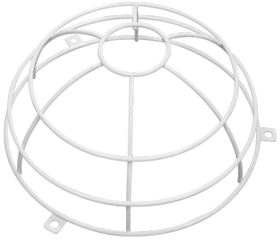

Wire basket BSK (Ø 200 x 90 mm)
Art.No: 92199

Dimensions: Ø 200 x 90 mm
Impact strength: IK09
Housing: coated steel basket



SM socket IP54 for PD2- / PD4-SM
Art.No: 92161

Dimensions: Ø 100 x 15 mm
Degree / class of protection: IP54
Housing: polycarbonate, UV-resistant

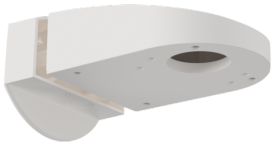

Wall holder PD4-SM
Art.No: 92441

Dimensions: 130 x 100 x 53 mm
Housing: polycarbonate, UV-resistant
Material color: white



Blinds PD2-SM
Art.No: 92260

Housing: Housing UV- and shockresistant Polycarbonate
Material color: transparent



Pendulum mounting set PD2/3/4 SM
Art.No: 93193

Dimensions: 1 : Ø 113 x 79 mm, 2 : Ø 113 x 34 mm
Housing: polycarbonate, UV-resistant
Material color: jet black, similar to RAL9005



Pendulum mounting set PD2/3/4 SM
Art.No: 93179

Dimensions: 1 : Ø 113 x 79 mm, 2 : Ø 113 x 34 mm
Housing: polycarbonate, UV-resistant
Material color: white, similar to RAL9010