B.E.G. LUXOMAT®



# PD2-M-2C-12-48V-3A-SM
# Set 92154-92199-92161

12–48 V 2-channel PIR motion detector with 360° detection and a range of up to Ø10m (78 m²), remote-controlled

## Order data

| Designation | Colour | Art.No |
|---|---|---|
| PD2-M-2C-12-48V-3A-SM | white | 92154 |
| Wire basket BSK (Ø 200 x 90 mm) | white | 92199 |
| SM socket IP54 for PD2- / PD4-SM | white | 92161 |

## Areas of application

- corridors/hallways
- toilets
- equipment rooms
- small offices
- open-plan offices
- conference rooms

## Technical data

| | |
|---|---|
| Voltage: | 12 – 48 V AC / DC |
| Dimensions: | **Ø 200 x 90 mm (92199)** |
| Power consumption: | < 1 W |
| Detection area: | horizontal 360° (Ceiling mounting) |
| Range: | max. Ø 10 m across<br>max. Ø 6 m towards<br>max. Ø 4 m seated |
| Monitored area (tangential movement): | 78 m² / 2.5 m mounting height |
| Mounting height min./max./recommended: | 2 m / 5 m / 2.5 m |
| Degree / class of protection: | IP20 / Class II |
| Impact strength: | **IK09 (92199)** |
| Ambient temperature: | -25 °C to +50 °C |
| Housing: | **polycarbonate, UV-resistant + coated steel basket (92199)** |
| Material color: | white mat, similar to RAL9010 |
| **Channel 1 (lighting control, potential-free (dry))** | |
| Switching power: | 3 A; cos φ = 1 |
| Type of contact (k): | 1x µ-contact, dry NO contact |
| Follow-up time: | 15 sec – 30 min, Pulse |
| Brightness set value: | 10 – 2000 Lux |
| **Channel 2 (HVAC control potential-free (dry))** | |
| Switching power: | 3 A; cos φ = 1 |
| Type of contact: | 1x µ-contact, dry NO contact |
| Follow-up time: | 5 min – 120 min, Alarm pulse, Pulse |
| Light measuring: | Mixed light measuring |

## Product information

Set : PD2-M-2C-12-48V-3A-SM + Wire basket BSK (Ø 200 x 90 mm) white + SM socket IP54 for PD2- / PD4-SM white, similar to RAL9010

Occupancy detector with operating voltage of 12-48 V

Two potential-free (dry) channels

Can be used as either Master device or Slave device

Manual switching via push-button possible

Additional functions can be set up using the optional remote control.

Factory settings 10 min and 500 lux (15 min HVAC)

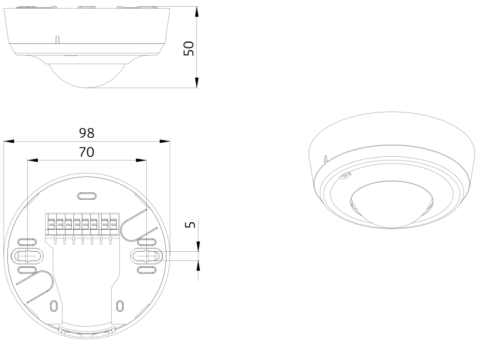
50
98
70
5

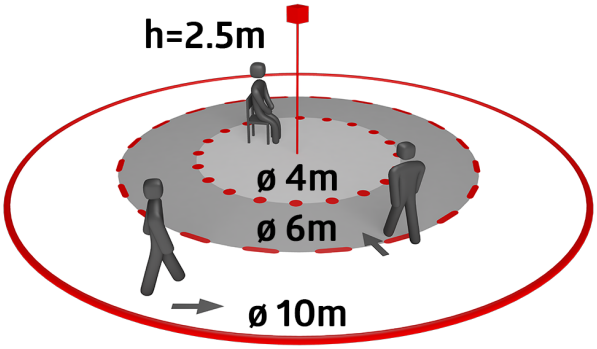
h=2.5m
ø 4m
ø 6m
ø 10m

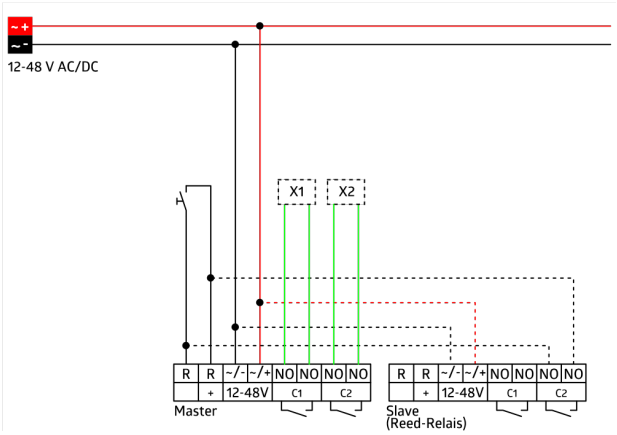
12-48 V AC/DC
X1
X2
R
R
-/-
-/+
NO
NO
NO
NO
+
12-48V
C1
C2
Master
Slave
(Reed-Relais)

## Set items

To receive the bundle according to the technical specification, please order the items listed.



**PD2-M-2C-12-48V-3A-SM**
Art.No: 92154

Voltage: 12 – 48 V AC / DC
Dimensions: Ø 98 x 47 mm
Power consumption: < 1 W

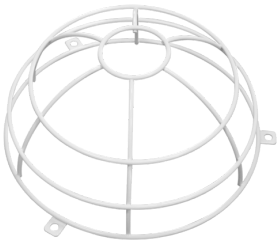

**Wire basket BSK (Ø 200 x 90 mm)**
Art.No: 92199

Dimensions: Ø 200 x 90 mm
Impact strength: IK09
Housing: coated steel basket



**SM socket IP54 for PD2- / PD4-SM**
Art.No: 92161

Dimensions: Ø 100 x 15 mm
Degree / class of protection: IP54
Housing: polycarbonate, UV-resistant