B.E.G. LUXOMAT® net



# PD2N-DALI-SYS-FM Set 93368-93763-92199

DALI-SYS PIR motion detector with 360° detection and a range of up to Ø10m (78 m²), for integration into DALI-SYS systems

## Order data

| Designation | Colour | Art.No |
|---|---|---|
| PD2N-DALI-SYS-FM | white | 93368 |
| Cover ring PD2N FM | black | 93763 |
| Wire basket BSK (Ø 200 x 90 mm) | white | 92199 |

## Technical data

| | |
|---|---|
| Voltage: | via DALI Bus, max. 22.5 V DC |
| Dimensions: | **Ø 200 x 90 mm (92199)** |
| Settings: | B.E.G. PC Tools, B.E.G. DALI-SYS router |
| Typ. power input: | 3 mA |
| Detection area: | horizontal 360° (Ceiling mounting) |
| Range: | max. Ø 10 m across<br>max. Ø 6 m towards<br>max. Ø 4 m seated |
| Monitored area (tangential movement): | 78 m² / 2.5 m mounting height |
| Mounting height min./max./recommended: | 2 m / 5 m / 2.5 m |
| Degree / class of protection: | IP20 / Class II |
| Impact strength: | **IK09 (92199)** |
| Ambient temperature: | -25 °C to +55 °C |
| Housing: | **polycarbonate, UV-resistant + coated steel basket (92199)** |
| Material color: | **black mat, similar to RAL9005 (93763)** |
| Follow-up time: | 1 sec – 120 min |
| Orientation light: | 5 – 100 % / 1 min – 120 min / ∞ |
| Brightness set value: | 10 – 2500 Lux |

## Product information

Set : PD2N-DALI-SYS-FM + Cover ring PD2N FM black mat, similar to RAL9005 + Wire basket BSK (Ø 200 x 90 mm) white

DALI multisensor

Powered via DALI bus

Seemless integration in B.E.G. LUXOMAT®net DALI-SYS

Bright LED indication for commissioning

Detection area can be extended thanks to master-slave-mode

Mixed light measurement with internal and external light sensor

Semi-automatic, full-automatic or twilight switch mode

Integrated daylight harvesting circuit (or switch output)

Guided Light, Soft-Start PLUS, Orientation light PLUS

Works out-of-the box for easy installation check

Full range of functions can only be activated with other products of the product group B.E.G. LUXOMAT®net DALI-SYS

This article is a component of a lighting control system from B.E.G., which supports the use of DALI control gear (luminaires, relays) from other manufacturers

The use of DALI application controllers from other manufacturers is not supported

The use of DALI input devices (sensors, push-buttons) from other manufacturers is not supported

Additional system components (hardware) from B.E.G. are required

Additional services (planning, commissioning and maintenance) from B.E.G. are required

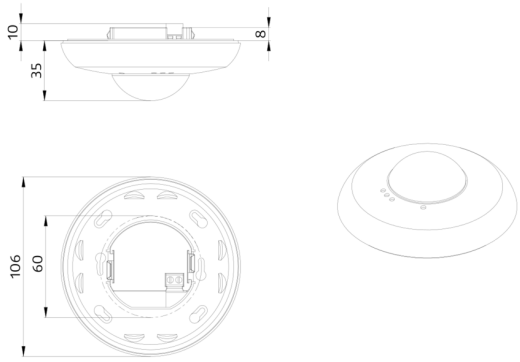
10
8
35
106
60

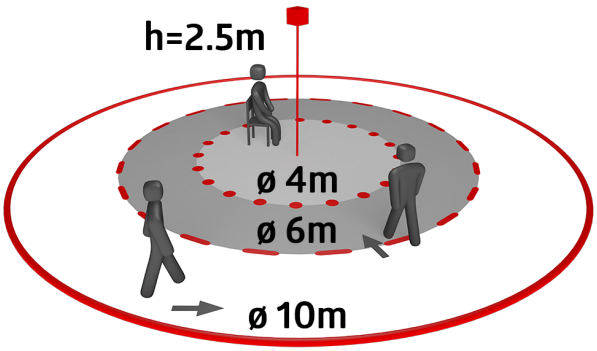
h=2.5m
ø 4m
ø 6m
ø 10m

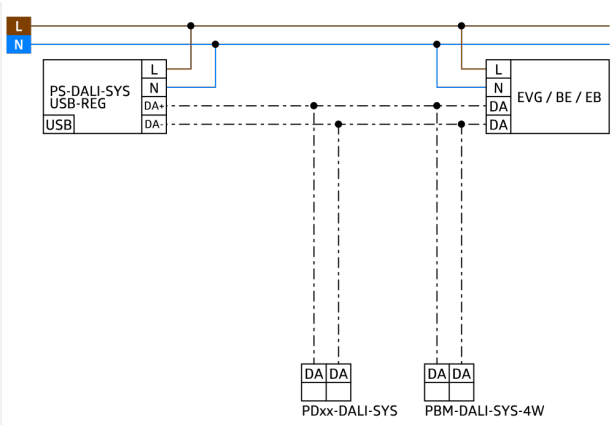
L
N
PS-DALI-SYS
USB-REG
USB
L
N
DA+
DA-
L
N
DA
DA
EVG / BE / EB
DA DA
PDxx-DALI-SYS
DA DA
PBM-DALI-SYS-4W

## Set items

To receive the bundle according to the technical specification, please order the items listed.



**PD2N-DALI-SYS-FM**
Art.No: 93368

Voltage: via DALI Bus, max. 22.5 V DC
Dimensions: Ø 106 x 42 mm
Settings: B.E.G. PC Tools, B.E.G. DALI-SYS router

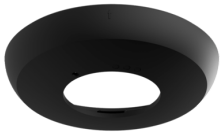

**Cover ring PD2N FM**
Art.No: 93763

Dimensions: Ø 106 x 20 mm
Impact strength: IK05
Housing: polycarbonate, UV-resistant

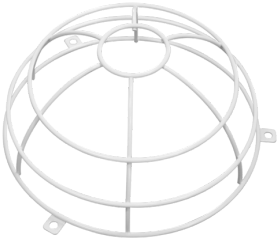

**Wire basket BSK (Ø 200 x 90 mm)**
Art.No: 92199

Dimensions: Ø 200 x 90 mm
Impact strength: IK09
Housing: coated steel basket