B.E.G. LUXOMAT® net



# PD2N-KNXs-BA-FC Set 93533-93771

KNX PIR motion detector (Basic) with 360° detection and a range of up to Ø10m (78 m²)

## Order data

| Designation | Colour | Art.No |
|---|---|---|
| PD2N-KNXs-BA-FC | white | 93533 |
| Cover ring PD2N FC | anthracite | 93771 |

## Technical data

| | |
|---|---|
| Voltage: | via KNX BUS |
| Dimensions: | Ø 83 x 55 mm |
| Typ. power input: | 12 mA |
| Detection area: | horizontal 360° (Ceiling mounting) |
| Range: | max. Ø 10 m across<br>max. Ø 6 m towards<br>max. Ø 4 m seated |
| Monitored area (tangential movement): | 78 m² / 2.5 m mounting height |
| Mounting height min./max./recommended: | 2 m / 5 m / 2.5 m |
| Degree / class of protection: | IP20 / Class III |
| Impact strength: | IK05 |
| Ambient temperature: | -25 °C to +55 °C |
| Housing: | polycarbonate, UV-resistant |
| Material color: | **anthracite mat, similar to RAL7016 (93771)** |
| Number of light sensors: | 2 |
| Number of PIR sensors: | 1 |
| KNX TP 256: | Yes |
| KNX Secure: | Yes |
| Brightness set value: | 5 – 2000 Lux |

## Product information

Set : PD2N-KNXs-BA-FC + Cover ring PD2N FC anthracite mat, similar to RAL7016

KNX occupancy detector with integrated KNX bus connector

KNX Secure ready

Individual adaption of the PIR sensor sensitivity

Mixed light measurement using internal, external and remote (optional) light sensors

Intelligent semi-automatic mode, occupancy-independent regulating mode (photoelectric switch), full automatic mode

1 x light output (for regulating or switching), 1 x slave output

Soft-start

Deactivatable status indicators

Detection area can be extended thanks to master-slave-mode

Extensive optimization options for light measurement

Measured light value is communicated to the bus

Manual influence via external KNX push buttons possible

Behaviour upon bus voltage return definable at choice

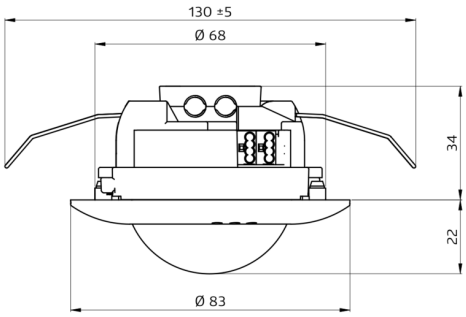
130 ±5
Ø 68
34
22
Ø 83

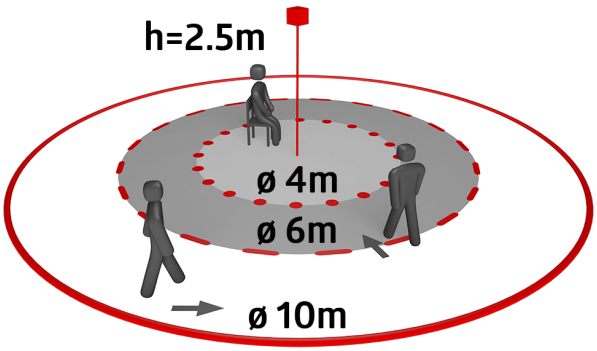
h=2.5m
ø 4m
ø 6m
ø 10m

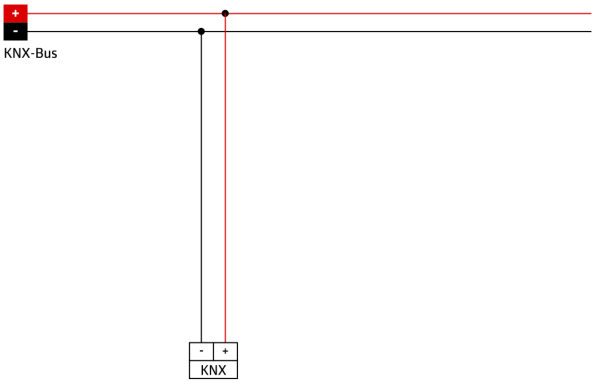
+
-
KNX-Bus
-
+
KNX

## Set items

To receive the bundle according to the technical specification, please order the items listed.



**PD2N-KNXs-BA-FC**
Art.No: 93533

Voltage: via KNX BUS
Dimensions: Ø 83 x 55 mm
Typ. power input: 12 mA



**Cover ring PD2N FC**
Art.No: 93771

Dimensions: Ø 82 x 13 mm
Impact strength: IK05
Housing: polycarbonate, UV-resistant