B.E.G. LUXOMAT® net

PD2N-KNXs-BA-FM Set 93534-93753-93763



KNX PIR motion detector (Basic) with 360° detection and a range of up to Ø10m (78 m²)

Order data

Designation	Colour	Art.No
PD2N-KNXs-BA-FM	white	93534
SM socle mounting set IP54 PD2N- / PD4N-FM	black	93753
Cover ring PD2N FM	black	93763

Technical data

Voltage:	via KNX BUS
Dimensions:	**Ø 106 x 42 mm + Ø 109 x 19 mm (93753)**
Typ. power input:	12 mA
Detection area:	horizontal 360° (Ceiling mounting)
Range:	max. Ø 10 m across max. Ø 6 m towards max. Ø 4 m seated
Monitored area (tangential movement):	78 m² / 2.5 m mounting height
Mounting height min./max./recommended:	2 m / 5 m / 2.5 m
Degree / class of protection:	**IP20 / Class III + IP54 (93753)**
Impact strength:	IK05
Ambient temperature:	-25 °C to +55 °C
Housing:	polycarbonate, UV-resistant
Material color:	**black mat, similar to RAL9005 (93763)**
Number of light sensors:	2
Number of PIR sensors:	1
KNX TP 256:	Yes
KNX Secure:	Yes
Brightness set value:	5 – 2000 Lux

Product information

Set : PD2N-KNXs-BA-FM + SM socle mounting set IP54 PD2N- / PD4N-FM black mat, similar to RAL9005 + Cover ring PD2N FM black mat, similar to RAL9005

KNX occupancy detector with integrated KNX bus connector

KNX Secure ready

Individual adaption of the PIR sensor sensitivity

Mixed light measurement using internal, external and remote (optional) light sensors

Intelligent semi-automatic mode, occupancy-independent regulating mode (photoelectric switch), full automatic mode

1 x light output (for regulating or switching), 1 x slave output

Soft-start

Deactivatable status indicators

Detection area can be extended thanks to master-slave-mode

Extensive optimization options for light measurement

Measured light value is communicated to the bus

Manual influence via external KNX push buttons possible

Behaviour upon bus voltage return definable at choice

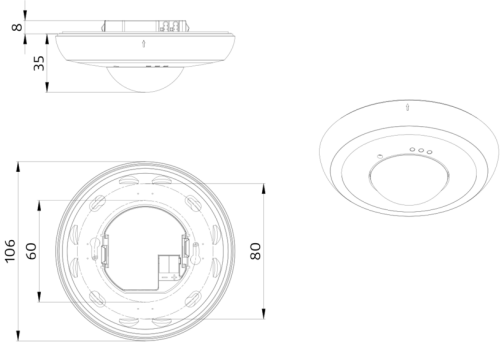
8
35
106
60
80

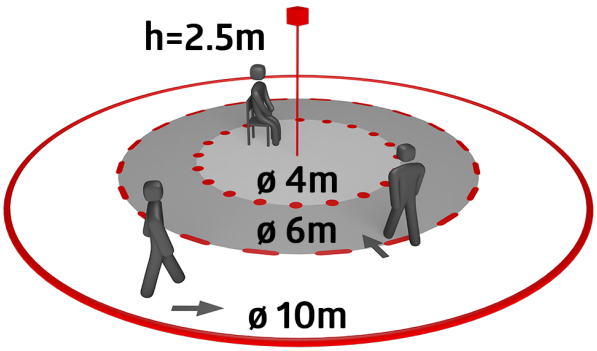
h=2.5m
ø 4m
ø 6m
ø 10m

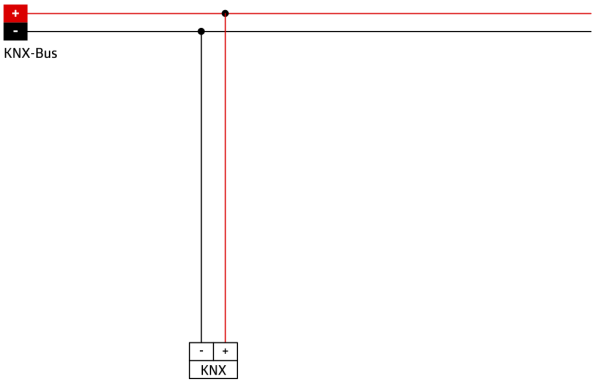
+
-
KNX-Bus
-
+
KNX

Set items

To receive the bundle according to the technical specification, please order the items listed.



PD2N-KNXs-BA-FM
Art.No: 93534

Voltage: via KNX BUS
Dimensions: Ø 106 x 42 mm
Typ. power input: 12 mA



SM socle mounting set IP54 PD2N- / PD4N-FM
Art.No: 93753

Dimensions: Ø 109 x 19 mm
Degree / class of protection: IP54
Housing: polycarbonate, UV-resistant

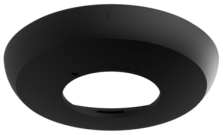

Cover ring PD2N FM
Art.No: 93763

Dimensions: Ø 106 x 20 mm
Impact strength: IK05
Housing: polycarbonate, UV-resistant