B.E.G. LUXOMAT® net



PD2N-KNXs-DX-FM Set 93513-93752-93762-92199

KNX PIR Motion Sensor (Deluxe) with 360° detection and a range of up to Ø10m (78 m²)

Order data

Designation	Colour	Art.No
PD2N-KNXs-DX-FM	white	93513
SM socle mounting set IP54 PD2N- / PD4N-FM	traffic white	93752
Cover ring PD2N FM	traffic white	93762
Wire basket BSK (Ø 200 x 90 mm)	white	92199

Technical data

Voltage:	via KNX BUS
Dimensions:	**Ø 200 x 90 mm (92199)**
Typ. power input:	12 mA
Detection area:	horizontal 360° (Ceiling mounting)
Range:	max. Ø 10 m across max. Ø 6 m towards max. Ø 4 m seated
Monitored area (tangential movement):	78 m² / 2.5 m mounting height
Mounting height min./max./recommended:	2 m / 5 m / 2.5 m
Degree / class of protection:	**IP20 / Class III + IP54 (93752)**
Impact strength:	**IK09 (92199)**
Ambient temperature:	-25 °C to +55 °C
Temperature measurement range:	-5 °C to +45 °C
Housing:	**polycarbonate, UV-resistant + coated steel basket (92199)**
Material color:	**traffic white mat, similar to RAL9016 (93762)**
Number of light sensors:	2
Number of PIR sensors:	1
KNX TP 256:	Yes
KNX Secure:	Yes
Orientation light:	5 – 100 % / OFF / 1 min – 255 min
Night light:	5 – 100 %
Brightness set value:	5 – 2000 Lux

Product information

Set : PD2N-KNXs-DX-FM + SM socle mounting set IP54 PD2N- / PD4N-FM traffic white mat, similar to RAL9016 + Cover ring PD2N FM traffic white mat, similar to RAL9016 + Wire basket BSK (Ø 200 x 90 mm) white

KNX occupancy detector with integrated KNX bus connector

KNX Secure ready

HCL/RGB control

Parameterisation from ETS 5 for integration into KNX systems

Individual adaption of the PIR sensor sensitivity

Mixed light measurement using internal, external and remote (optional) light sensors

Intelligent semi-automatic mode, occupancy-independent regulating mode (photoelectric switch), full automatic mode

1 x Light (for regulating or switching), 1 x slave output, 3 separate HVAC-blocs

Regulation of up to three lighting groups using offset (external influence possible)

Short presence, self-adjusting follow-up time, corridor function

Various locking functions

Soft-start

Two logic modules

Recall of light scenes

Deactivatable status indicators

Temperature- and noise sensor

The product database for import into the ETS database can be downloaded from the B.E.G. homepage.

Detection area can be extended thanks to master-slave-mode

Extensive optimization options for light measurement

Measured light value is communicated to the bus

Adaption of dimming curve

Bidirectionally remote control-capable with the IR adapter and the B.E.G. smartphone app

PIN code

IR remote control-capable via IR remote control (optionally)

5 button remote control, programmable at choice (accessory)

Programming button (phys. address) can be operated via remote control

HVAC mode (0=automatic, 1=comfort, 2=stand-by, 3=economy, 4=antifreeze/heat protection)

Manual influence via external KNX push buttons possible

Function control (heartbeat, cyclical sending)

Occupancy simulation

Forced switch-off

Intelligent central-off function

Premonition of switch-off

Burn-in function for fluorescent lamps selectable from 1h till 100h

Behaviour upon bus voltage return definable at choice

Variable safety pause after switching off the lights

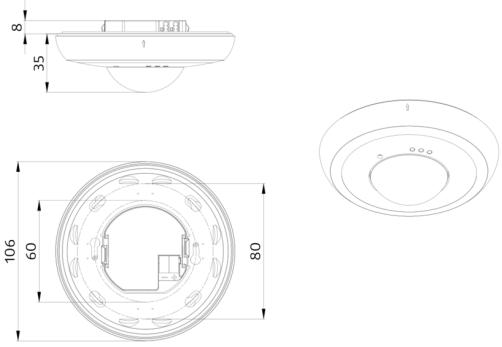
8
35
106
60
80

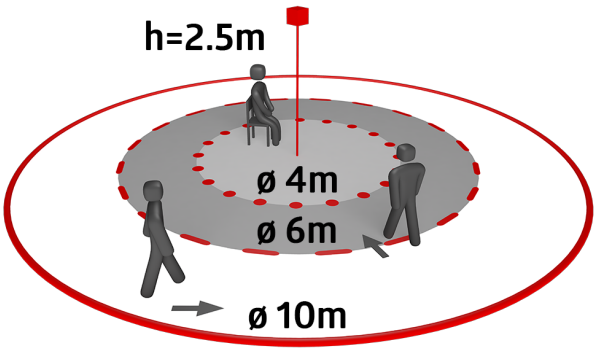
h=2.5m
ø 4m
ø 6m
ø 10m

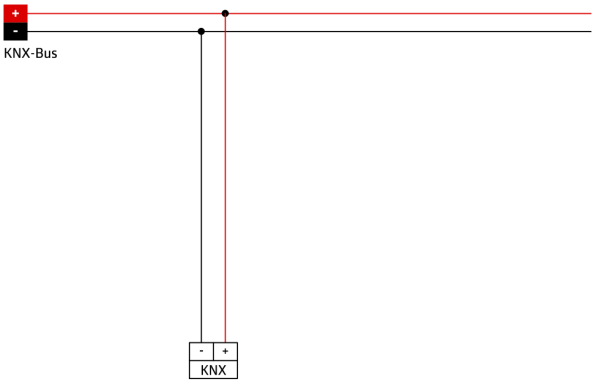
+
-
KNX-Bus
-
+
KNX

Set items

To receive the bundle according to the technical specification, please order the items listed.



PD2N-KNXs-DX-FM
Art.No: 93513

Voltage: via KNX BUS
Dimensions: Ø 106 x 42 mm
Typ. power input: 12 mA



SM socle mounting set IP54 PD2N- / PD4N-FM
Art.No: 93752

Dimensions: Ø 109 x 19 mm
Degree / class of protection: IP54
Housing: polycarbonate, UV-resistant

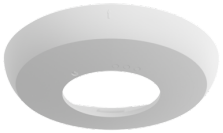

Cover ring PD2N FM
Art.No: 93762

Dimensions: Ø 106 x 20 mm
Impact strength: IK05
Housing: polycarbonate, UV-resistant

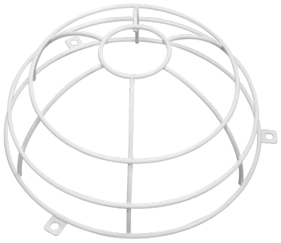

Wire basket BSK (Ø 200 x 90 mm)
Art.No: 92199

Dimensions: Ø 200 x 90 mm
Impact strength: IK09
Housing: coated steel basket