# PD2N-M-DACO-DUO
# DALI-2 Set 93453-93454




DALI-2 PIR motion detector with integrated DALI application controller, 360° detection, and a range of up to Ø10m (78 m²), 2 DALI channels

## Order data

| Designation | Colour | Art.No |
|---|---|---|
| PD2N-M-DACO-DUO DALI-2 | white | 93453 |
| SM socle mounting set IP54 PD2N H | white | 93454 |

## Areas of application

- small offices
- open-plan offices

## Technical data

| | |
|---|---|
| Voltage: | 230 V AC ±10% 50 Hz |
| Dimensions: | **Ø 84 x 85 mm + Ø 110 x 65 mm (93454)** |
| Power consumption: | approx. 3 W |
| Slave devices: | up to 4 |
| Detection area: | horizontal 360° (Ceiling mounting) |
| Range: | max. Ø 10 m across<br>max. Ø 6 m towards<br>max. Ø 4 m seated |
| Monitored area (tangential movement): | 78 m² / 2.5 m mounting height |
| Mounting height min./max./recommended: | 2 m / 5 m / 2.5 m |
| Degree / class of protection: | **IP54 (93454)** |
| Impact strength: | IK05 |
| Ambient temperature: | -25 °C to +50 °C |
| Housing: | polycarbonate, UV-resistant |
| Material color: | **white, similar to RAL9010 (93454)** |
| **Channel 1 and Channel 2 (lighting control)** | |
| DALI output: | 40 mA (guaranteed), 60 mA (max.), shut down mechanism |
| Supported control gear: | DT0, DT5, DT6, DT7 |
| Supported control devices: | - (single master) |
| Follow-up time: | 1 min – 150 min |
| Orientation light: | 10 – 30 % / OFF / 5 min – 60 min / ∞ |
| Brightness set value: | 10 – 2500 Lux |
| Light measuring: | Mixed light measuring |

## Product information

Set : PD2N-M-DACO-DUO DALI-2 + SM socle mounting set IP54 PD2N H white, similar to RAL9010

Occupancy detector with integrated DALI application controller for energy-efficient lighting control

2 channels

DALI-2 certified product

Integrated DALI power supply

DALI interface for controlling digital, dimmable ECGs in broadcast mode

Manual switching or dimming via conventional pushbuttons

Bidirectional IR communication enables fast integration into the project management function of the B.E.G. One app

Complete range of functions can only be activated using the BLE-IR-Adapter and a compatible Smartphone or Tablet (Android, iOS).

Semi-automatic, full automatic, presence-independent or light-independent mode adjustable

Adjustable regulation dynamics (minimum and maximum values)

Adjustable speed and delay of the regulation

Single master version, not networkable

Detection area can be extended by using slave devices

Mixed light measurement with internal and external light sensor

DALI output power can be increased with accessories

Integrated daylight harvesting circuit (or switch output)

Adjustable switch-on value

Last value - Reminder function for switch-on value

Adjustable brightness set value and reflection factor

Indication of the current light sensor value in the B.E.G. One App

Self-check and display of device errors in the B.E.G. One App

Status LEDs can be activated / deactivated

PIN code

Corridor function - Deactivates the possibility to switch off the light via the push-button

Number of DALI participants can be determined quickly and reliably via the B.E.G. Online DALI Line Planner

Software is backwards compatible with the first generation (except DSI, double lock and corridor function)

Factory setting 10 min follow-up time and 500 lux brightness set value

Including pre-assembled spring clamp with strain relief and contact protection cap for recessed ceiling mounting

Accessory for surface mounting available

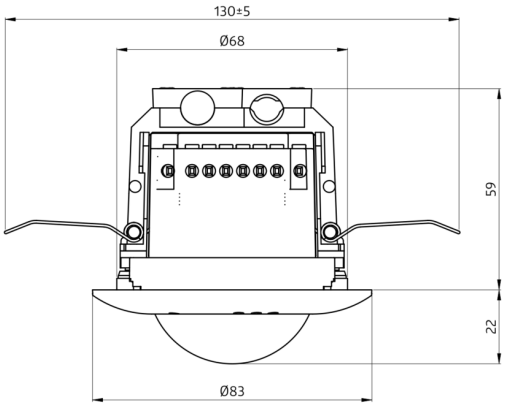
130±5
Ø68
59
22
Ø83

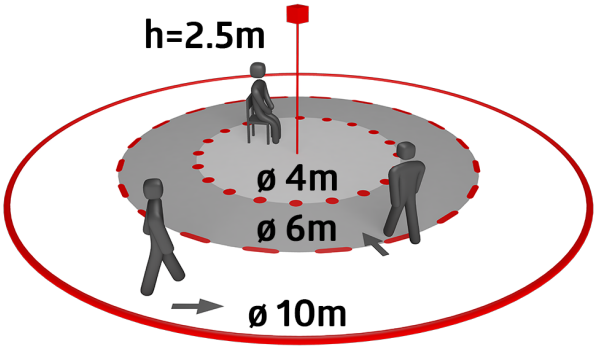
h=2.5m
ø 4m
ø 6m
ø 10m

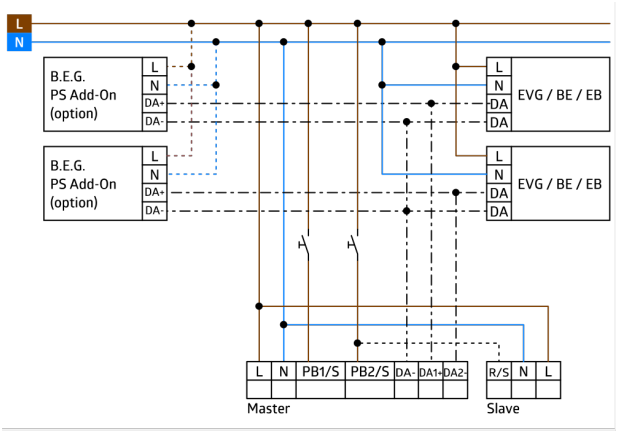
L
N
B.E.G.
PS Add-On
(option)
L
N
DA+
DA-
EVG / BE / EB
DA
DA
B.E.G.
PS Add-On
(option)
EVG / BE / EB
L
N
PB1/S
PB2/S
DA-
DA1+
DA2+
Master
R/S
N
L
Slave

## Set items

To receive the bundle according to the technical specification, please order the items listed.




**PD2N-M-DACO-DUO DALI-2**
Art.No: 93453

Voltage: 230 V AC ±10% 50 Hz
Dimensions: Ø 84 x 85 mm
Power consumption: approx. 3 W



**SM socle mounting set IP54 PD2N H**
Art.No: 93454

Dimensions: Ø 110 x 65 mm
Degree / class of protection: IP54
Material color: white, similar to RAL9010