B.E.G. LUXOMAT®



PD2N-M-DACO-PRO DALI-2 Set 93351-93773-92199

Occupancy detector with integrated DALI application controller for energy-efficient lighting control

DALI-2 certified product

Integrated DALI power supply and 4 push-button inputs

Order data

Designation	Colour	Art.No
PD2N-M-DACO-PRO DALI-2	white	93351
Cover ring PD2N FC	black	93773
Wire basket BSK (Ø 200 x 90 mm)	white	92199

Areas of application

- small offices
- open-plan offices

Technical data

Voltage:	230 V AC ±10% 50 Hz
Dimensions:	**Ø 200 x 90 mm (92199)**
Power consumption:	approx. 2 W
Slave devices:	up to 8
Detection area:	horizontal 360° (Ceiling mounting)
Range:	max. Ø 10 m across max. Ø 6 m towards max. Ø 4 m seated
Monitored area (tangential movement):	78 m² / 2.5 m mounting height
Mounting height min./max./recommended:	2 m / 5 m / 2.5 m
Degree / class of protection:	IP20 / Class II
Impact strength:	**IK09 (92199)**
Ambient temperature:	-25 °C to +50 °C
Housing:	**polycarbonate, UV-resistant + coated steel basket (92199)**
Material color:	**black mat, similar to RAL9005 (93773)**
Channel 1 (lighting control)	
DALI output:	80 mA (guaranteed), 125 mA (max.), shut down mechanism
Supported control gear:	DT5, DT6, DT7, DT8-Tc (HCL only possible with DT8-Tc, 2700 - 6500 K)
Supported control devices:	B.E.G. BMS (motion detection, measured light output)
Follow-up time:	1 min – 150 min
Orientation light:	5 – 100 % / OFF / 1 min – 255 min / ∞
Brightness set value:	10 – 2500 Lux
Light measuring:	Mixed light measuring

Product information

Set : PD2N-M-DACO-PRO DALI-2 + Cover ring PD2N FC black mat, similar to RAL9005 + Wire basket BSK (Ø 200 x 90 mm) white

Occupancy detector with integrated DALI application controller for energy-efficient lighting control

DALI-2 certified product

Integrated DALI power supply and 4 push-button inputs

Adjustable communication mode "Broadcast" (1 light zone, without addressing) or "Multicast" (several light zones, HVAC, with addressing)

Up to 8 lighting groups can be created, with up to 4 profiles and 2 scenes possible per group

Manual switching or dimming via conventional pushbuttons

Quick commissioning and maintenance processes via Smartphone/Tablet App (Android, iOS) - Bluetooth required

Expandable with up to 8 B.E.G. BMS multi-sensors

Support for DALI-2 push buttons

Semi-automatic, full automatic, presence-independent or light-independent mode adjustable

Adjustable regulation dynamics (minimum and maximum values)

Over-the-air (OTA) firmware update: the firmware can be conveniently updated remotely without the need for cables

Adjustable speed and delay of the regulation

Mixed light measurement with internal and external light sensor

DALI output power can be increased with accessories

Integrated daylight harvesting circuit (or switch output)

Adjustable switch-on value

Last value - Reminder function for switch-on value

Adjustable brightness set value and reflection factor

Indication of the current light sensor value in the B.E.G. One App

Self-check and display of device errors in the B.E.G. One App

Status LEDs can be activated / deactivated

PIN code

Corridor function - Deactivates the possibility to switch off the light via the push-button

Partition wall function: In order to be able to respond to

changes in room geometry, B.E.G. BMS detectors can be used to flexibly adjust the lighting groups of two rooms

Number of DALI participants can be determined quickly and reliably via the B.E.G. Online DALI Line Planner

Factory setting 10 min follow-up time and 500 lux brightness set value

Including pre-assembled spring clamp with strain relief and contact protection cap for recessed ceiling mounting

Accessory for surface mounting available

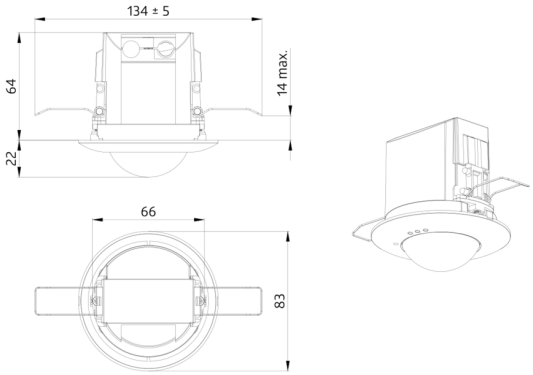
134 ± 5
64
14 max.
22
66
83

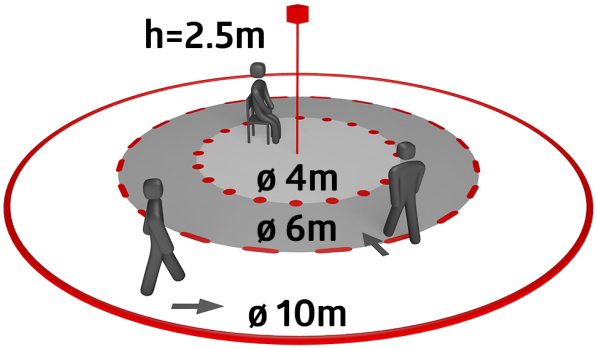
h=2.5m
ø 4m
ø 6m
ø 10m

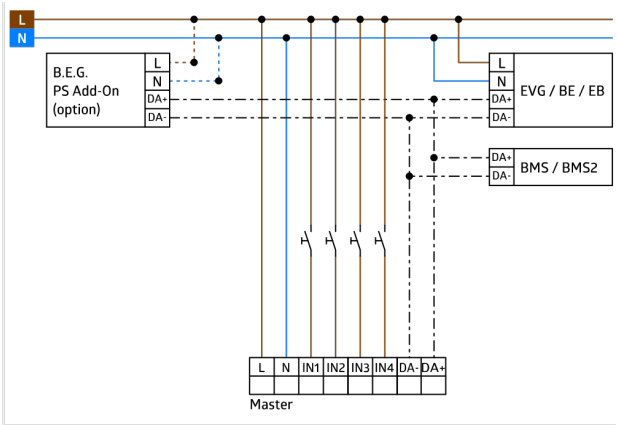
L
N
B.E.G.
PS Add-On
(option)
DA+
DA-
EVG / BE / EB
BMS / BMS2
IN1
IN2
IN3
IN4
Master

Set items

To receive the bundle according to the technical specification, please order the items listed.



PD2N-M-DACO-PRO DALI-2
Art.No: 93351

Voltage: 230 V AC ±10% 50 Hz
Dimensions: Ø 84 x 85 mm
Power consumption: approx. 2 W



Cover ring PD2N FC
Art.No: 93773

Dimensions: Ø 82 x 13 mm
Impact strength: IK05
Housing: polycarbonate, UV-resistant

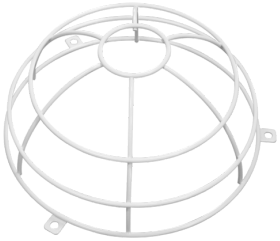

Wire basket BSK (Ø 200 x 90 mm)
Art.No: 92199

Dimensions: Ø 200 x 90 mm
Impact strength: IK09
Housing: coated steel basket