B.E.G. LUXOMAT® net



PD2N-RF-KNXs-DX-FC
Set 93580-93782

KNX RF PIR Motion Sensor (Deluxe) with 360° detection and a range of up to Ø10m (78 m²), communication via KNX RF wireless

Order data

Designation	Colour	Art.No
PD2N-RF-KNXs-DX-FC	white	93580
SM socle mounting set IP54 PD2N H	traffic white	93782

Technical data

Voltage:	230 V AC ±10% 50 / 60 Hz
Dimensions:	**Ø 83 x 81 mm + Ø 110 x 65 mm (93782)**
Power consumption:	1 W
Detection area:	horizontal 360° (Ceiling mounting)
Range:	max. Ø 10 m across max. Ø 6 m towards max. Ø 4 m seated
Monitored area (tangential movement):	78 m² / 2.5 m mounting height
Mounting height min./max./recommended:	2 m / 5 m / 2.5 m
Degree / class of protection:	**IP54 (93782)**
Impact strength:	IK05
Ambient temperature:	-25 °C to +55 °C
Temperature measurement range:	-5 °C to +45 °C
Housing:	polycarbonate, UV-resistant
Material color:	**traffic white, similar to RAL9016 (93782)**
Number of light sensors:	2
Number of PIR sensors:	1
KNX RF 256:	Yes
KNX Secure:	Yes
Switching power:	2300 W, cos φ = 1 1150 VA, cos φ = 0.5 300 W LED
Type of contact (k):	µ-contact, dry NO contact
Orientation light:	5 – 100 % / OFF / 1 min – 255 min
Night light:	5 – 100 %
Brightness set value:	5 – 2000 Lux
Frequency:	868.3 MHz (EU), RF1.R, 10 dBm
Transmit range:	max. 150 m

Product information

Set : PD2N-RF-KNXs-DX-FC + SM socle mounting set IP54 PD2N H traffic white, similar to RAL9016

KNX RF occupancy detector

Communication via KNX RF radio

KNX Secure ready

HCL/RGB control

Parameterisation from ETS 5 for integration into KNX systems

Individual adaption of the PIR sensor sensitivity

Mixed light measurement using internal, external and remote (optional) light sensors

Intelligent semi-automatic mode, occupancy-independent regulating mode (photoelectric switch), full automatic mode

1 x Light (for regulating or switching), 1 x slave output, 3 separate HVAC-blocs

Regulation of up to three lighting groups using offset (external influence possible)

Short presence, self-adjusting follow-up time, corridor function

Various locking functions

Soft-start

Two logic modules

Recall of light scenes

Deactivatable status indicators

Temperature- and noise sensor

Detection area can be extended thanks to master-slave-mode

Extensive optimization options for light measurement

Measured light value is communicated to the bus

Adaption of dimming curve

Bidirectionally remote control-capable with the IR adapter and the B.E.G. smartphone app

PIN code

IR remote control-capable via IR remote control (optionally)

5 button remote control, programmable at choice (accessory)

Programming button (phys. address) can be operated via remote control

HVAC mode (0=automatic, 1=comfort, 2=stand-by, 3=economy, 4=antifreeze/heat protection)

Manual influence via external KNX push buttons possible

Function control (heartbeat, cyclical sending)

Occupancy simulation

Forced switch-off

Intelligent central-off function

Premonition of switch-off

Burn-in function for fluorescent lamps selectable from 1h till 100h

Behaviour upon bus voltage return definable at choice

Variable safety pause after switching off the lights

Optional potential-free switching contact for switching operation

Repeater function can be activated

Perfectly suited for renovations and modernisations

Due to the radio frequency of 868 MHz, the device is only authorised for operation in Europe

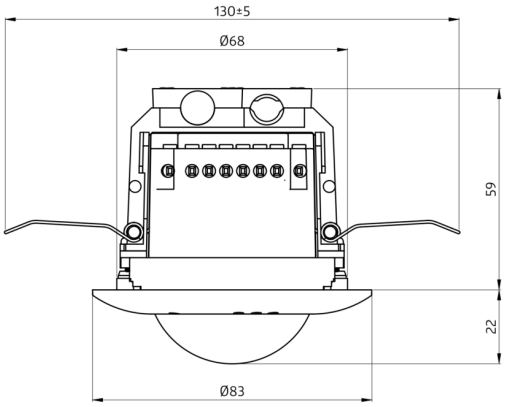
130±5
Ø68
59
22
Ø83

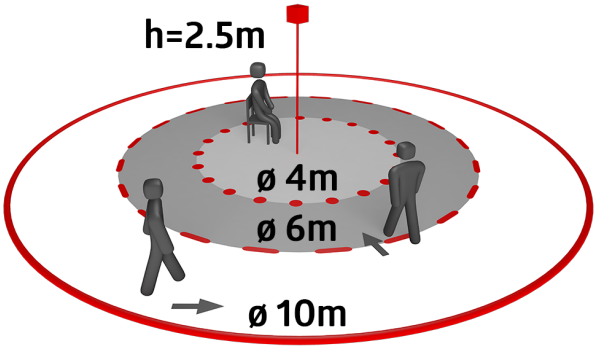
h=2.5m
ø 4m
ø 6m
ø 10m

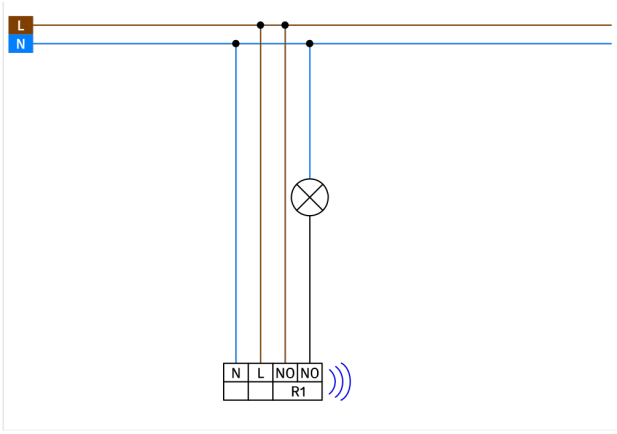
L
N
N
L
NO
NO
R1

Set items

To receive the bundle according to the technical specification, please order the items listed.



PD2N-RF-KNXs-DX-FC
Art.No: 93580

Voltage: 230 V AC ±10% 50 / 60 Hz
Dimensions: Ø 83 x 81 mm
Power consumption: 1 W



SM socle mounting set IP54 PD2N H
Art.No: 93782

Dimensions: Ø 110 x 65 mm
Degree / class of protection: IP54
Material color: traffic white, similar to RAL9016