

# PD3-1C-FC Set
# 92197-93085-92199

230V PIR motion detector with 360° detection
and a range of up to Ø10m (78 m²)

## Order data

| Designation | Colour | Art.No |
|---|---|---|
| PD3-1C-FC | white | 92197 |
| Cover ring PD2/PD3 FC | | 93085 |
| Wire basket BSK (Ø 200 x 90 mm) | white | 92199 |

## Technical data

| | |
|---|---|
| Voltage: | 110 – 240 V AC 50 / 60 Hz |
| Dimensions: | **Ø 200 x 90 mm (92199)** |
| Power consumption: | < 0.3 W |
| Detection area: | horizontal 360° (Ceiling mounting) |
| Range: | max. Ø 10 m across<br>max. Ø 6 m towards<br>max. Ø 4 m seated |
| Monitored area (tangential movement): | 78 m² / 2.5 m mounting height |
| Mounting height min./max./recommended: | 2 m / 5 m / 2.5 m |
| Degree / class of protection: | IP20 / Class II |
| Ambient temperature: | -25 °C to +50 °C |
| Housing: | **polycarbonate, UV-resistant + coated steel basket (92199)** |
| Material color: | **jet black glossy, similar to RAL9005 (93085)** |
| **Channel 1 (lighting control)** | |
| Switching power: | 2000 W, cos φ = 1<br>1000 VA, cos φ = 0.5<br>400 W LED, minimum runtime > 5 min<br>max. inrush current Ip (20 ms) = 80 A |
| Type of contact (k): | µ-contact, NO contact |
| Follow-up time: | 30 sec – 30 min, Pulse |
| Switch-on threshold: | 10 – 2000 Lux |

## Product information

Set : PD3-1C-FC + Cover ring PD2/PD3 FC jet black glossy, similar to RAL9005 + Wire basket BSK (Ø 200 x 90 mm) white

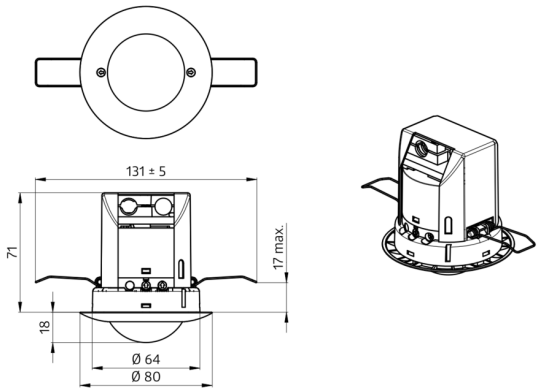
131 ± 5
71
17 max.
18
Ø 64
Ø 80

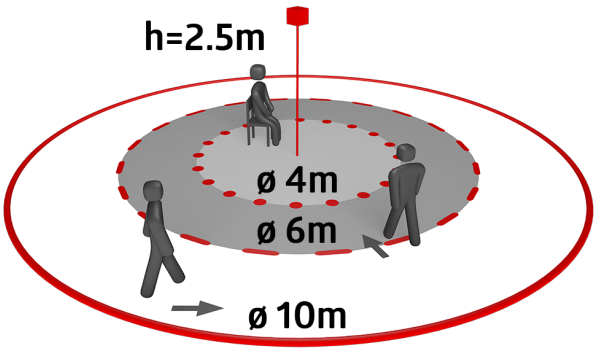
h=2.5m
ø 4m
ø 6m
ø 10m

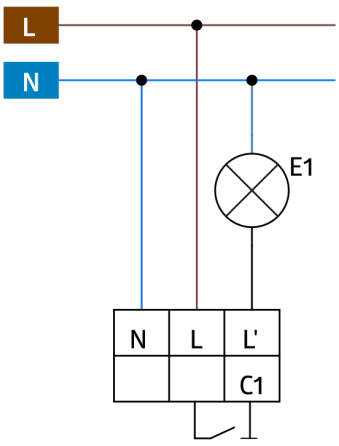
L
N
E1
N
L
L'
C1

## Set items

To receive the bundle according to the technical specification, please order the items listed.



**PD3-1C-FC**
Art.No: 92197

Voltage: 110 – 240 V AC 50 / 60 Hz
Dimensions: Ø 85 x 79 mm
Power consumption: < 0.3 W



**Cover ring PD2/PD3 FC**
Art.No: 93085

Dimensions: Ø 84 x 9 mm
Housing: polycarbonate, UV-resistant
Material color: jet black glossy, similar to RAL9005

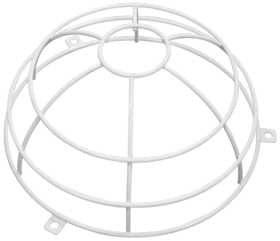

**Wire basket BSK (Ø 200 x 90 mm)**
Art.No: 92199

Dimensions: Ø 200 x 90 mm
Impact strength: IK09
Housing: coated steel basket