B.E.G. LUXOMAT®




# PD3N-1C-FC Micro Set 92184-92991

230V PIR motion detector with 360° detection and a range of up to Ø10m (78 m²), featuring an acoustic sensor and remote control functionality

## Order data

| Designation | Colour | Art.No |
|---|---|---|
| PD3N-1C-FC Micro | white | 92184 |
| Square design frame PD3N-FC | white | 92991 |

## Areas of application

- toilets
- equipment rooms

## Technical data

| | |
|---|---|
| Voltage: | 110 – 240 V AC 50 / 60 Hz |
| Dimensions: | Ø 83 x 81 mm |
| Power consumption: | approx. 0.5 W |
| Detection area: | horizontal 360° (Ceiling mounting) |
| Range: | max. Ø 10 m across<br>max. Ø 6 m towards<br>max. Ø 4 m seated |
| Monitored area (tangential movement): | 78 m² / 2.5 m mounting height |
| Mounting height min./max./recommended: | 2 m / 5 m / 2.5 m |
| Degree / class of protection: | IP23 / Class II |
| Impact strength: | IK04 |
| Ambient temperature: | -25 °C to +50 °C |
| Housing: | polycarbonate, UV-resistant |
| Material color: | white mat, similar to RAL9010 |
| **Channel 1 (lighting control)** | |
| Switching power: | 2300 W, cos φ = 1<br>1150 VA, cos φ = 0.5<br>800 W LED<br>max. inrush current Ip (20 ms) = 165 A<br>max. inrush current Ip (200 µs) = 800 A |
| Type of contact (k): | 1x µ-contact, NO contact with tungsten pre-make contact |
| Follow-up time: | 30 sec – 30 min, Pulse |
| Switch-on threshold: | 10 – 2000 Lux |

## Product information

Set : PD3N-1C-FC Micro + Square design frame PD3N-FC white mat, similar to RAL9010

Remote control-capable ceiling motion detector with integrated acoustic sensor

One channel for light switching

Zero crossing switching

Special optical system for detection of even the smallest movements

Additional functions can be set up using the optional remote control.

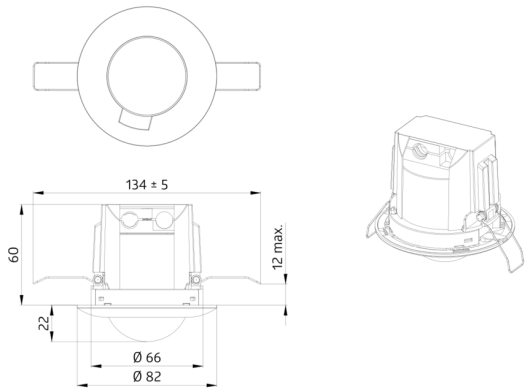
134 ± 5
60
12 max.
22
Ø 66
Ø 82

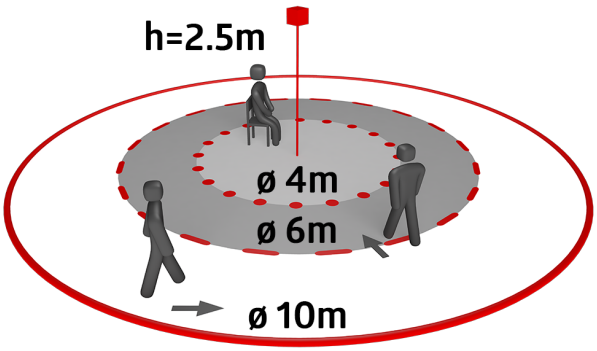
h=2.5m
ø 4m
ø 6m
ø 10m

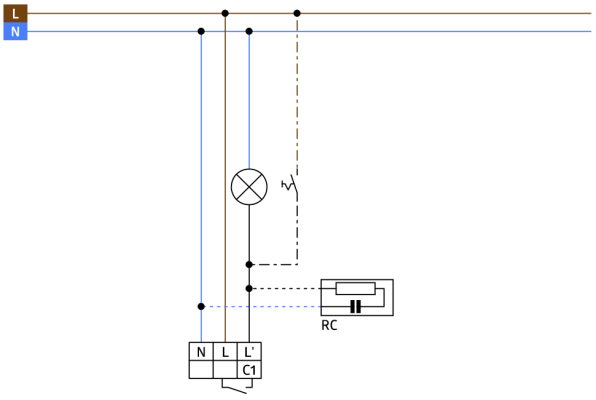
L
N
RC
N
L
L'
C1

## Set items

To receive the bundle according to the technical specification, please order the items listed.




**PD3N-1C-FC Micro**
Art.No: 92184

Voltage: 110 – 240 V AC 50 / 60 Hz
Dimensions: Ø 83 x 81 mm
Power consumption: approx. 0.5 W



**Square design frame PD3N-FC**
Art.No: 92991

Dimensions: 83 x 83 x 8 mm
Housing: polycarbonate, UV-resistant
Material color: white mat, similar to RAL9010