B.E.G. LUXOMAT®




# PD3N-1C-NO-PF-FC Set 92576-93086

230V PIR motion detector with 360° detection and a range of up to Ø10m (78 m²), remote-controlled and equipped with a dry contact

## Order data

| Designation | Colour | Art.No |
|---|---|---|
| PD3N-1C-NO-PF-FC | white | 92576 |
| Cover ring PD3N FC | jet black | 93086 |

## Areas of application

- underground car parks
- entrance halls
- corridors/hallways
- toilets
- equipment rooms
- small offices
- open-plan offices
- conference rooms

## Technical data

| | |
|---|---|
| Voltage: | 110 – 240 V AC 50 / 60 Hz |
| Dimensions: | Ø 83 x 81 mm |
| Power consumption: | approx. 0.4 W |
| Detection area: | horizontal 360° (Ceiling mounting) |
| Range: | max. Ø 10 m across<br>max. Ø 6 m towards<br>max. Ø 4 m seated |
| Monitored area (tangential movement): | 78 m² / 2.5 m mounting height |
| Mounting height min./max./recommended: | 2 m / 5 m / 2.5 m |
| Degree / class of protection: | IP23 / Class II |
| Impact strength: | IK04 |
| Ambient temperature: | -25 °C to +50 °C |
| Housing: | polycarbonate, UV-resistant |
| Material color: | **jet black mat, similar to RAL9005 (93086)** |
| **Channel 1 (lighting control, potential-free (dry))** | |
| Switching power: | 2300 W, cos φ = 1<br>1150 VA, cos φ = 0.5<br>800 W LED<br>max. inrush current Ip (20 ms) = 165 A<br>max. inrush current Ip (200 µs) = 800 A |
| Type of contact (k): | 1x µ-contact, dry NO contact with tungsten pre-make contact |
| Follow-up time: | 15 sec – 30 min, Pulse |
| Switch-on threshold: | 10 – 2000 Lux |

## Product information

Set : PD3N-1C-NO-PF-FC + Cover ring PD3N FC jet black mat, similar to RAL9005

Remote control-capable ceiling motion detector

One potential-free (dry) switching contact

Zero crossing switching

Special optical system for detection of even the smallest movements

Additional functions can be set up using the optional remote control.

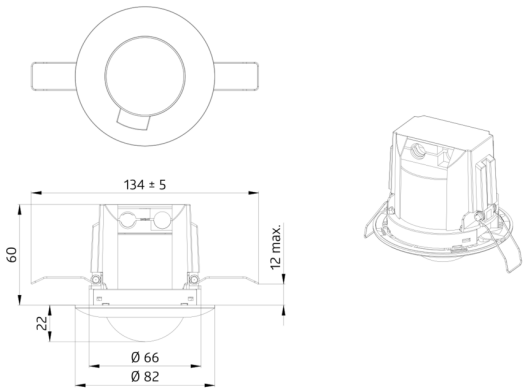
134 ± 5
60
12 max.
22
Ø 66
Ø 82

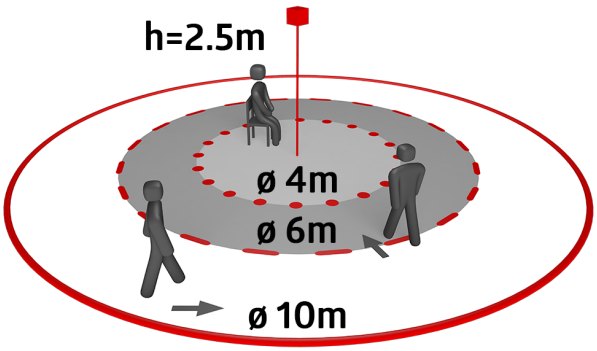
h=2.5m
ø 4m
ø 6m
ø 10m

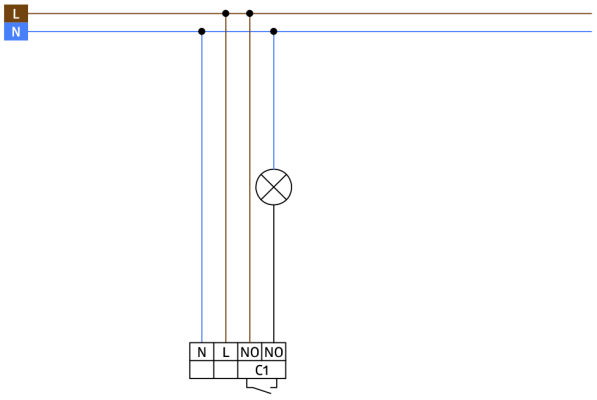
L
N
N
L
NO
NO
C1

## Set items

To receive the bundle according to the technical specification, please order the items listed.



**PD3N-1C-NO-PF-FC**
Art.No: 92576

Voltage: 110 – 240 V AC 50 / 60 Hz
Dimensions: Ø 83 x 81 mm
Power consumption: approx. 0.4 W



**Cover ring PD3N FC**
Art.No: 93086

Dimensions: Ø 83 x 6 mm
Housing: polycarbonate, UV-resistant
Material color: jet black mat, similar to RAL9005