B.E.G. LUXOMAT®




# PD3N-2C-FC Set
# 92198-92199-92991

230V 2-channel PIR motion detector with 360° coverage and a range of up to Ø10m (78 m²), remote-controlled

## Order data

| Designation | Colour | Art.No |
|---|---|---|
| PD3N-2C-FC | white | 92198 |
| Wire basket BSK (Ø 200 x 90 mm) | white | 92199 |
| Square design frame PD3N-FC | white | 92991 |

## Areas of application

- corridors/hallways
- staircases
- toilets
- equipment rooms

## Technical data

| | |
|---|---|
| Voltage: | 110 – 240 V AC 50 / 60 Hz |
| Dimensions: | **Ø 200 x 90 mm (92199)** |
| Power consumption: | approx. 0.5 W |
| Detection area: | horizontal 360° (Ceiling mounting) |
| Range: | max. Ø 10 m across<br>max. Ø 6 m towards<br>max. Ø 4 m seated |
| Monitored area (tangential movement): | 78 m² / 2.5 m mounting height |
| Mounting height min./max./recommended: | 2 m / 5 m / 2.5 m |
| Degree / class of protection: | IP23 / Class II |
| Impact strength: | **IK09 (92199)** |
| Ambient temperature: | -25 °C to +50 °C |
| Housing: | **polycarbonate, UV-resistant + coated steel basket (92199)** |
| Material color: | white mat, similar to RAL9010 |
| **Channel 1 (lighting control)** | |
| Switching power: | 2300 W, cos φ = 1<br>1150 VA, cos φ = 0.5<br>800 W LED<br>max. inrush current Ip (20 ms) = 165 A<br>max. inrush current Ip (200 µs) = 800 A |
| Type of contact (k): | 1x µ-contact, NO contact with tungsten pre-make contact |
| Follow-up time: | 30 sec – 30 min, Pulse |
| Switch-on threshold: | 10 – 2000 Lux |
| **Channel 2 (HVAC control potential-free (dry))** | |
| Switching power: | 3 A (230 V), cos φ = 1 |
| Type of contact: | 1x NO contact (dry) |
| Follow-up time: | 5 min – 120 min |

## Product information

Set : PD3N-2C-FC + Wire basket BSK (Ø 200 x 90 mm) white + Square design frame PD3N-FC white mat, similar to RAL9010

Remote control-capable ceiling motion detector

One channel for light switching

Zero crossing switching

One additional potential-free (dry) contact for HVAC

Additional functions can be set up using the optional remote control.

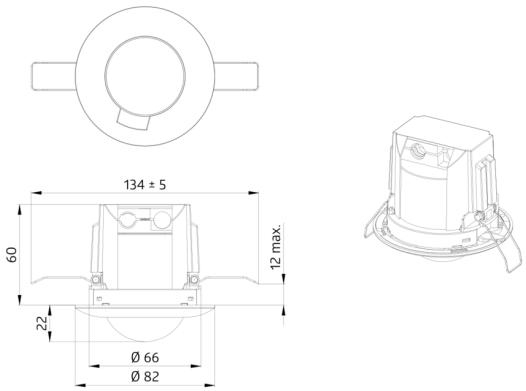
134 ± 5
60
12 max.
22
Ø 66
Ø 82

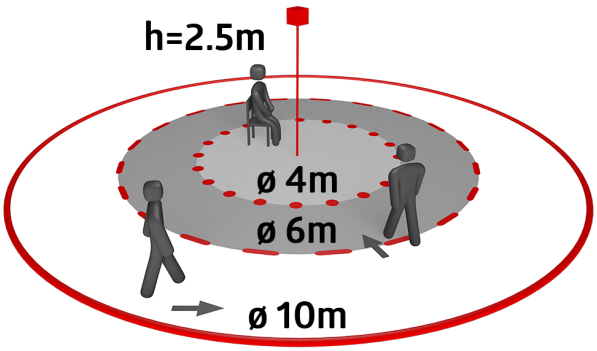
h=2.5m
ø 4m
ø 6m
ø 10m

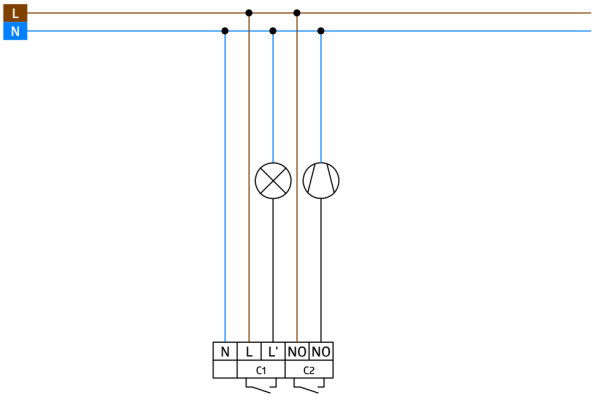
L
N
N
L
L'
NO
NO
C1
C2

## Set items

To receive the bundle according to the technical specification, please order the items listed.



**PD3N-2C-FC**
Art.No: 92198

Voltage: 110 – 240 V AC 50 / 60 Hz
Dimensions: Ø 83 x 81 mm
Power consumption: approx. 0.5 W

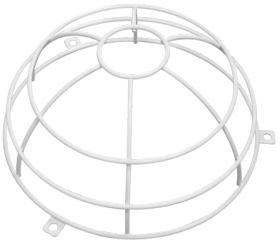

**Wire basket BSK (Ø 200 x 90 mm)**
Art.No: 92199

Dimensions: Ø 200 x 90 mm
Impact strength: IK09
Housing: coated steel basket



**Square design frame PD3N-FC**
Art.No: 92991

Dimensions: 83 x 83 x 8 mm
Housing: polycarbonate, UV-resistant
Material color: white mat, similar to RAL9010