B.E.G. LUXOMAT®



PD4-M-1C-C-PS-SM Set 92485-92199-92441

230V PIR motion detector with 360° coverage and a detection area of up to 40x5m (250 m²), for hallways, remote-controlled, NO contact, and safety circuit via NC

Order data

Designation	Colour	Art.No
PD4-M-1C-C-PS-SM	white	92485
Wire basket BSK (Ø 200 x 90 mm)	white	92199
Wall holder PD4-SM	white	92441

Areas of application

- entrance halls
- corridors/hallways
- small offices
- open-plan offices
- conference rooms
- classrooms/seminar rooms

Technical data

Voltage:	110 – 240 V AC 50 / 60 Hz
Dimensions:	**Ø 200 x 90 mm (92199) + 130 x 100 x 53 mm (92441)**
Power consumption:	approx. 0.7 W
Detection area:	horizontal 360° (Ceiling mounting)
Range:	max. Ø 40 m across max. Ø 20 m towards
Monitored area (tangential movement):	250 m² / 2.5 m mounting height
Mounting height min./max./recommended:	2.4 m / 2.6 m / 2.5 m
Degree / class of protection:	IP54 / Class II
Impact strength:	**IK09 (92199)**
Ambient temperature:	-25 °C to +50 °C
Housing:	**polycarbonate, UV-resistant + coated steel basket (92199)**
Material color:	white mat, similar to RAL9010
Channel 1 (lighting control)	
Switching power:	2300 W, cos φ = 1 1150 VA, cos φ = 0.5 800 W LED max. inrush current Ip (20 ms) = 120 A
Type of contact (k):	1x µ-contact, NO contact with tungsten pre-make contact, additional NC-safety contact
Follow-up time:	15 sec – 30 min, Pulse
Switch-on threshold:	10 – 2000 Lux
Light measuring:	Mixed light measuring

Product information

Set : PD4-M-1C-C-PS-SM + Wire basket BSK (Ø 200 x 90 mm) white + Wall holder PD4-SM white

Occupancy detector with NO contact and safety circuit by NC contact

Guarantees illumination even if sensor fails

Designed for corridors

Version as master device

Detection area can be extended by using slave devices

Manual switching via push-button possible

Additional functions can be set up using the optional remote control.

Factory settings 10 min and 500 lux

There are markings to ensure correct alignment during installation

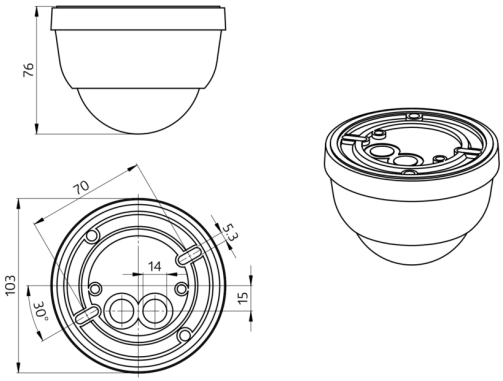
76
70
5.3
14
103
30°
15

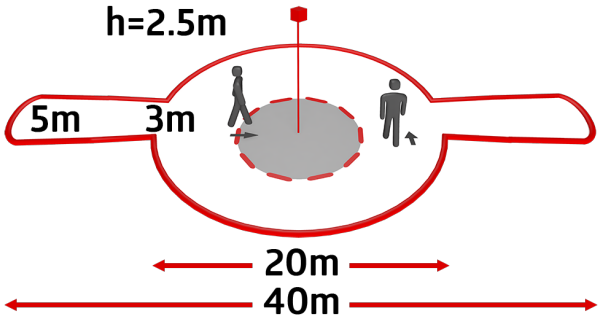
h=2.5m
5m
3m
20m
40m

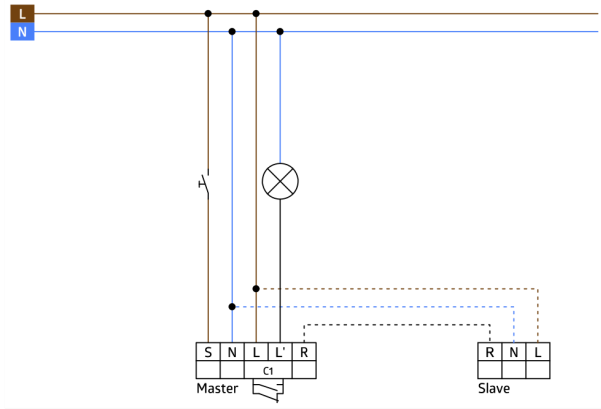
L
N
S
N
L
L'
R
C1
Master
R
N
L
Slave

Set items

To receive the bundle according to the technical specification, please order the items listed.



PD4-M-1C-C-PS-SM
Art.No: 92485

Voltage: 110 – 240 V AC 50 / 60 Hz
Dimensions: Ø 101 x 76 mm
Power consumption: approx. 0.7 W

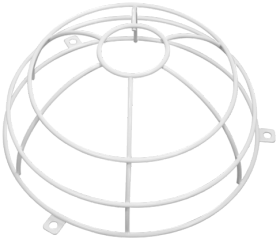

Wire basket BSK (Ø 200 x 90 mm)
Art.No: 92199

Dimensions: Ø 200 x 90 mm
Impact strength: IK09
Housing: coated steel basket

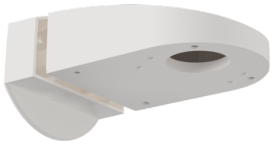

Wall holder PD4-SM
Art.No: 92441

Dimensions: 130 x 100 x 53 mm
Housing: polycarbonate, UV-resistant
Material color: white