B.E.G. LUXOMAT®



# PD4-M-1C-C-SM Set 92587-92199

230V PIR motion sensor with 360° coverage and a detection area of up to 40x5m (250 m²), suitable for hallways and remote-controlled

## Order data

| Designation | Colour | Art.No |
|---|---|---|
| PD4-M-1C-C-SM | white | 92587 |
| Wire basket BSK (Ø 200 x 90 mm) | white | 92199 |

## Areas of application

- corridors/hallways

## Technical data

| | |
|---|---|
| Voltage: | 110 – 240 V AC 50 / 60 Hz |
| Dimensions: | **Ø 200 x 90 mm (92199)** |
| Power consumption: | approx. 0.5 W |
| Detection area: | horizontal 360° (Ceiling mounting) |
| Range: | max. Ø 40 m across<br>max. Ø 20 m towards |
| Monitored area (tangential movement): | 250 m² / 2.5 m mounting height |
| Mounting height min./max./recommended: | 2.4 m / 2.6 m / 2.5 m |
| Degree / class of protection: | IP54 / Class II |
| Impact strength: | **IK09 (92199)** |
| Ambient temperature: | -25 °C to +50 °C |
| Housing: | **polycarbonate, UV-resistant + coated steel basket (92199)** |
| Material color: | white mat, similar to RAL9010 |
| **Channel 1 (lighting control, potential-free (dry))** | |
| Switching power: | 2300 W, cos φ = 1<br>1150 VA, cos φ = 0.5<br>800 W LED<br>max. inrush current Ip (20 ms) = 165 A<br>max. inrush current Ip (200 µs) = 800 A |
| Type of contact (k): | 1x µ-contact, dry NO contact with tungsten pre-make contact |
| Follow-up time: | 15 sec – 30 min, Pulse |
| Switch-on threshold: | 10 – 2000 Lux |
| Light measuring: | Mixed light measuring |

## Product information

Set : PD4-M-1C-C-SM + Wire basket BSK (Ø 200 x 90 mm) white

Occupancy detector designed for corridors

One potential-free (dry) switching contact

Version as master device

Detection area can be extended by using slave devices

Manual switching via push-button possible

Additional functions can be set up using the optional remote control.

Factory settings 10 min and 500 lux

There are markings to ensure correct alignment during installation

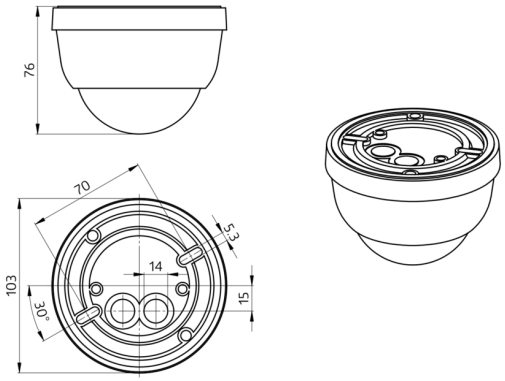
76
70
5.3
14
103
30°
15

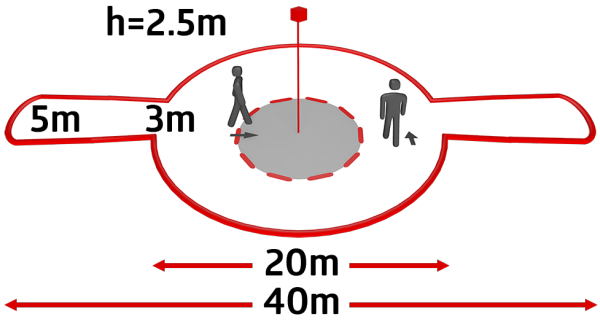
h=2.5m
5m
3m
20m
40m

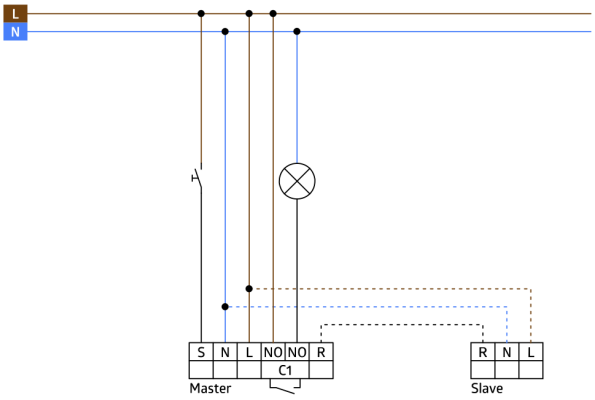
L
N
S
N
L
NO
NO
R
C1
Master
R
N
L
Slave

## Set items

To receive the bundle according to the technical specification, please order the items listed.



**PD4-M-1C-C-SM**
Art.No: 92587

Voltage: 110 – 240 V AC 50 / 60 Hz
Dimensions: Ø 101 x 76 mm
Power consumption: approx. 0.5 W

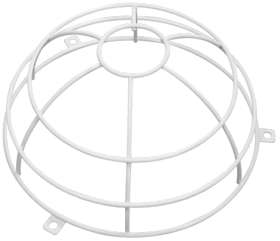

**Wire basket BSK (Ø 200 x 90 mm)**
Art.No: 92199

Dimensions: Ø 200 x 90 mm
Impact strength: IK09
Housing: coated steel basket