B.E.G. LUXOMAT®



PD4-M-2C-C-SM Set 92440-92376

230V 2-channel PIR motion detector with 360° coverage and a detection area of up to 40x5m (250 m²), suitable for hallways and remote-controlled

Order data

Designation	Colour	Art.No
PD4-M-2C-C-SM	white	92440
Surface mounting socket IP65 PD4-SM IP54	white	92376

Areas of application

- corridors/hallways

Technical data

Voltage:	110 – 240 V AC 50 / 60 Hz
Dimensions:	Ø 101 x 76 mm
Power consumption:	< 0.5 W
Detection area:	horizontal 360° (Ceiling mounting)
Range:	max. Ø 40 m across max. Ø 20 m towards
Monitored area (tangential movement):	250 m² / 2.5 m mounting height
Mounting height min./max./recommended:	2.4 m / 2.6 m / 2.5 m
Degree / class of protection:	IP54 / Class II
Impact strength:	IK04
Ambient temperature:	-25 °C to +50 °C
Housing:	polycarbonate, UV-resistant
Material color:	white mat, similar to RAL9010
Channel 1 (lighting control)	
Switching power:	2300 W, cos φ = 1 1150 VA, cos φ = 0.5 800 W LED max. inrush current Ip (20 ms) = 165 A max. inrush current Ip (200 µs) = 800 A
Type of contact (k):	1x µ-contact, NO contact with tungsten pre-make contact
Follow-up time:	15 sec – 30 min, Pulse
Switch-on threshold:	10 – 2000 Lux
Channel 2 (HVAC control potential-free (dry))	
Switching power:	3 A (230 V), cos φ = 1
Type of contact:	1x µ-contact, dry NO contact
Follow-up time:	5 min – 120 min, Alarm pulse, Pulse
Light measuring:	Mixed light measuring

Product information

Set : PD4-M-2C-C-SM + Surface mounting socket IP65 PD4-SM IP54 white

Occupancy detector designed for corridors

One channel for light switching

One additional potential-free (dry) contact for HVAC

Version as master device

Detection area can be extended by using slave devices

Manual switching via push-button possible

Alarm pulse: the detector triggers only when three movements are detected within 9 seconds

Additional functions can be set up using the optional remote control.

There are markings to ensure correct alignment during installation

Factory settings 10 min and 500 lux (15 min HVAC)

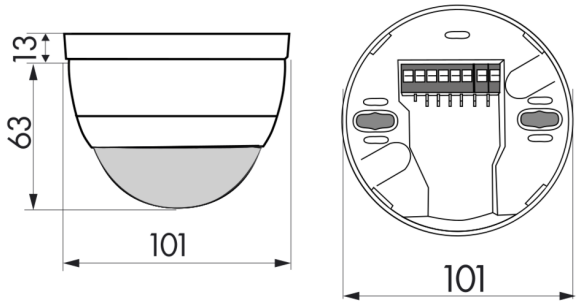
13
63
101
101

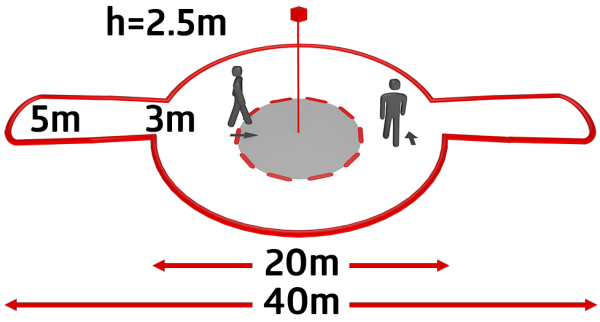
h=2.5m
5m
3m
20m
40m

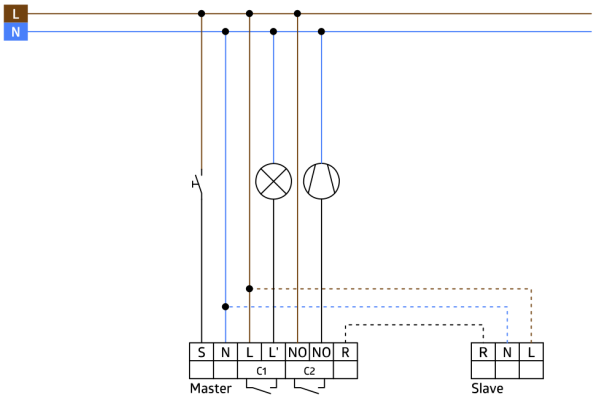
L
N
S
N
L
L'
NO
NO
R
C1
C2
Master
R
N
L
Slave

Set items

To receive the bundle according to the technical specification, please order the items listed.



PD4-M-2C-C-SM
Art.No: 92440

Voltage: 110 – 240 V AC 50 / 60 Hz
Dimensions: Ø 101 x 76 mm
Power consumption: < 0.5 W



Surface mounting socket IP65 PD4-SM IP54
Art.No: 92376

Dimensions: Ø 115 x 70 mm
Degree / class of protection: IP65
Impact strength: IK07