B.E.G. LUXOMAT®



PD4-S-C-SM Set
92442-92199-92441

Slave PIR motion detector with 360° coverage and a detection area of up to 40 x 5 m (250 m²), for hallways

Order data

Designation	Colour	Art.No
PD4-S-C-SM	white	92442
Wire basket BSK (Ø 200 x 90 mm)	white	92199
Wall holder PD4-SM	white	92441

Technical data

Voltage:	110 – 240 V AC 50 / 60 Hz
Dimensions:	**Ø 200 x 90 mm (92199) + 130 x 100 x 53 mm (92441)**
Power consumption:	approx. 0.2 W
Detection area:	horizontal 360° (Ceiling mounting)
Range:	max. Ø 40 m across max. Ø 20 m towards
Monitored area (tangential movement):	250 m² / 2.5 m mounting height
Mounting height min./max./recommended:	2.4 m / 2.6 m / 2.5 m
Degree / class of protection:	IP54 / Class II
Impact strength:	**IK09 (92199)**
Ambient temperature:	-25 °C to +50 °C
Housing:	**polycarbonate, UV-resistant + coated steel basket (92199)**
Material color:	white mat, similar to RAL9010
Pulse interval:	2 or 9 sec

Product information

Set : PD4-S-C-SM + Wire basket BSK (Ø 200 x 90 mm) white + Wall holder PD4-SM white

Slave device detector designed for corridors

For extending the detection area of a Master device

Trigger pulse to master device upon detected movement independent of the ambient light level

Compatible with 230 V devices. Concerning exceptions please see the respective master device.

There are markings to ensure correct alignment during installation

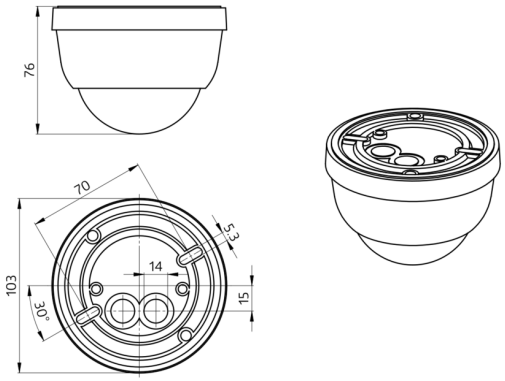
76
70
5.3
14
103
30°
15

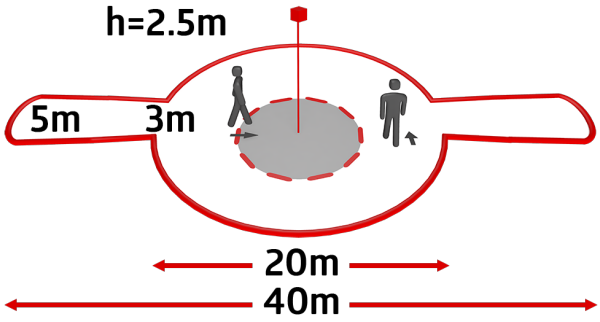
h=2.5m
5m
3m
20m
40m

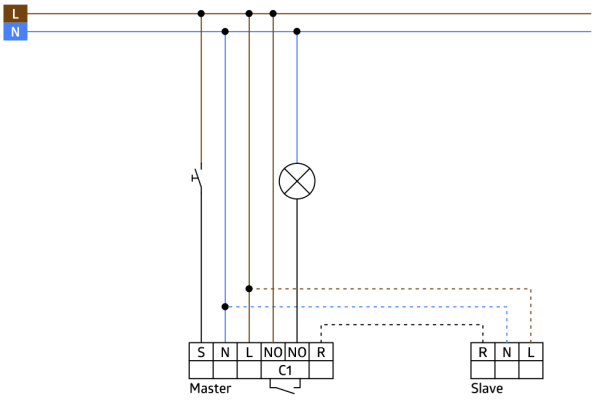
L
N
S
N
L
NO
NO
R
C1
Master
R
N
L
Slave

Set items

To receive the bundle according to the technical specification, please order the items listed.



PD4-S-C-SM
Art.No: 92442

Voltage: 110 – 240 V AC 50 / 60 Hz
Dimensions: Ø 101 x 76 mm
Power consumption: approx. 0.2 W

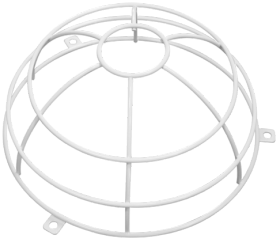

Wire basket BSK (Ø 200 x 90 mm)
Art.No: 92199

Dimensions: Ø 200 x 90 mm
Impact strength: IK09
Housing: coated steel basket

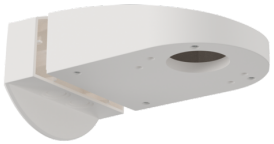

Wall holder PD4-SM
Art.No: 92441

Dimensions: 130 x 100 x 53 mm
Housing: polycarbonate, UV-resistant
Material color: white