

PD4-S-DAA4G-SM Set 92759-92199-92441

DAA4G Slave PIR Motion Detector with 360° coverage and a range of up to Ø24m (450 m²)

Order data

Designation	Colour	Art.No
PD4-S-DAA4G-SM	white	92759
Wire basket BSK (Ø 200 x 90 mm)	white	92199
Wall holder PD4-SM	white	92441

Technical data

Voltage:	22 V DC via DALI Bus
Dimensions:	**Ø 200 x 90 mm (92199) + 130 x 100 x 53 mm (92441)**
Detection area:	horizontal 360° (Ceiling mounting)
Range:	max. Ø 24 m across max. Ø 8 m towards max. Ø 6.4 m seated
Monitored area (tangential movement):	450 m² / 2.5 m mounting height
Mounting height min./max./recommended:	2 m / 10 m / 2.5 m
Degree / class of protection:	IP54 / Class II
Impact strength:	**IK09 (92199)**
Ambient temperature:	-25 °C to +50 °C
Housing:	**polycarbonate, UV-resistant + coated steel basket (92199)**
Material color:	white mat, similar to RAL9010
up to 4 slave devices in combination with one PD4-M-DAA4G	
Pulse interval:	30 sec (in test mode 2 sec during 3 min)

Product information

Set : PD4-S-DAA4G-SM + Wire basket BSK (Ø 200 x 90 mm) white + Wall holder PD4-SM white

DALI bus operated slave device

For extension of the detection area of a master device PD4-M-DAA4G / PD4-M-HCL

Trigger pulse to master device upon detected movement independent of the ambient light level

Automatic test mode via master device

Plug & Play – no parameterisation required

Easy to mount

False ceilling or surface mount version available

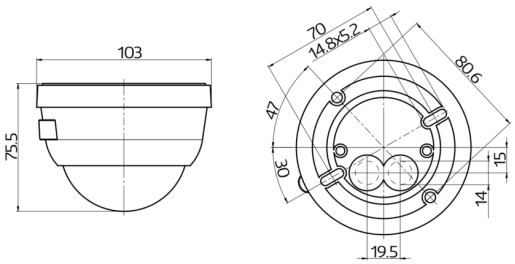
103
75.5
70
14.8x5.2
80.6
47
30
15
14
19.5

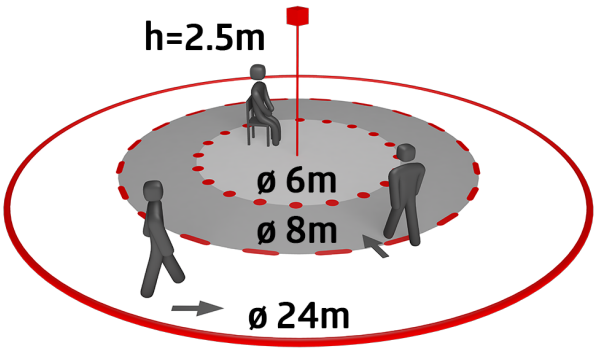
h=2.5m
ø 6m
ø 8m
ø 24m

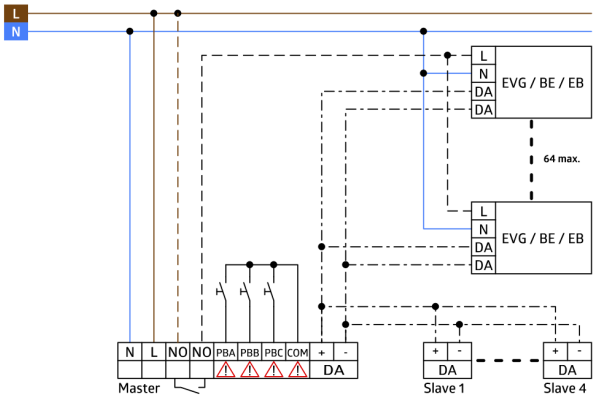
L
N
L
N
DA
DA
EVG / BE / EB
64 max.
L
N
DA
DA
EVG / BE / EB
N
L
NO
NO
PBA
PBB
PBC
COM
+
-
DA
Master
+
-
DA
Slave 1
+
-
DA
Slave 4

Set items

To receive the bundle according to the technical specification, please order the items listed.



PD4-S-DAA4G-SM
Art.No: 92759

Voltage: 22 V DC via DALI Bus
Dimensions: Ø 103 x 76 mm
Detection area: horizontal 360° (Ceiling mounting)

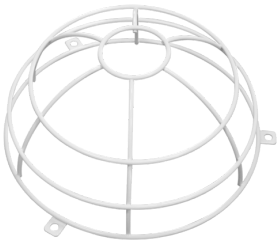

Wire basket BSK (Ø 200 x 90 mm)
Art.No: 92199

Dimensions: Ø 200 x 90 mm
Impact strength: IK09
Housing: coated steel basket

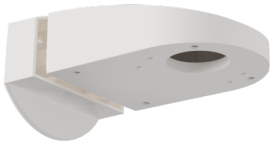

Wall holder PD4-SM
Art.No: 92441

Dimensions: 130 x 100 x 53 mm
Housing: polycarbonate, UV-resistant
Material color: white