B.E.G. LUXOMAT®



PD4N-1C-C-SM Set 92270-92441

230V PIR motion detector with 360° coverage and a detection area of up to 40x5m (250 m²), suitable for hallways and remote-controlled

Order data

Designation	Colour	Art.No
PD4N-1C-C-SM	white	92270
Wall holder PD4-SM	white	92441

Areas of application

- corridors/hallways

Technical data

Voltage:	110 – 240 V AC 50 / 60 Hz
Dimensions:	**Ø 109 x 65 mm + 130 x 100 x 53 mm (92441)**
Power consumption:	approx. 0.4 W
Detection area:	horizontal 360° (Ceiling mounting)
Range:	max. Ø 40 m across max. Ø 20 m towards
Monitored area (tangential movement):	250 m² / 2.5 m mounting height
Mounting height min./max./recommended:	2.4 m / 2.6 m / 2.5 m
Degree / class of protection:	IP44 / Class II
Impact strength:	IK04
Ambient temperature:	-25 °C to +50 °C
Housing:	polycarbonate, UV-resistant
Material color:	white mat, similar to RAL9010
Channel 1 (lighting control)	
Switching power:	2300 W, cos φ = 1 1150 VA, cos φ = 0.5 800 W LED max. inrush current Ip (20 ms) = 165 A max. inrush current Ip (200 µs) = 800 A
Type of contact (k):	1x µ-contact, NO contact with tungsten pre-make contact
Follow-up time:	15 sec – 30 min, Pulse
Switch-on threshold:	10 – 2000 Lux

Product information

Set : PD4N-1C-C-SM + Wall holder PD4-SM white

Remote control-capable ceiling motion detector designed for corridors

One channel for light switching

Zero crossing switching

Special optical system for detection of even the smallest movements

Additional functions can be set up using the optional remote control.

Uninterrupted parallel circuit detection of several detectors

Manual switching via push-button possible

Factory settings 10 min and 500 lux

There are markings to ensure correct alignment during installation

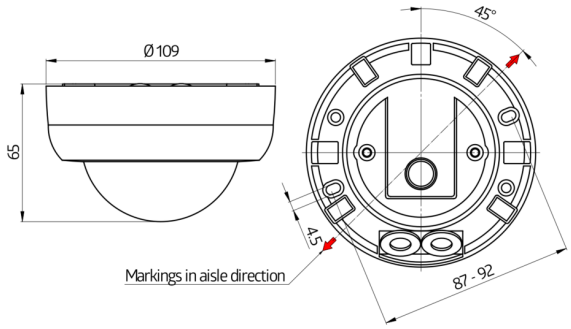
Ø 109
65
45°
4.5
Markings in aisle direction
87 - 92

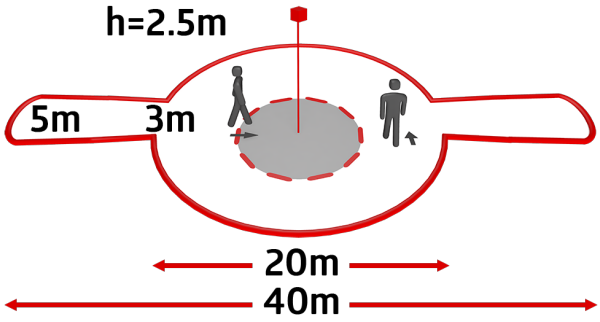
h=2.5m
5m
3m
20m
40m

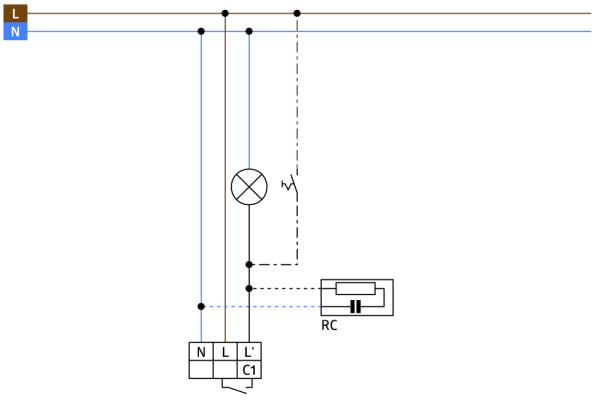
L
N
RC
N
L
L'
C1

Set items

To receive the bundle according to the technical specification, please order the items listed.



PD4N-1C-C-SM
Art.No: 92270

Voltage: 110 – 240 V AC 50 / 60 Hz
Dimensions: Ø 109 x 65 mm
Power consumption: approx. 0.4 W

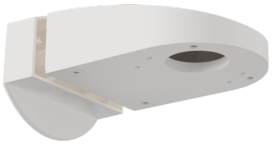

Wall holder PD4-SM
Art.No: 92441

Dimensions: 130 x 100 x 53 mm
Housing: polycarbonate, UV-resistant
Material color: white