B.E.G. LUXOMAT® net



# PD4N-BMS DALI-2 Set 93546-93752-93742-92199

DALI-2 (BMS) PIR motion detector with 360° coverage and a range of up to Ø24m (450 m²), DALI-2 input device

## Order data

| Designation | Colour | Art.No |
|---|---|---|
| PD4N-BMS DALI-2 | white | 93546 |
| SM socle mounting set IP54 PD2N- / PD4N-FM | traffic white | 93752 |
| Corridor lens PD4N type A, Cover ring | traffic white | 93742 |
| Wire basket BSK (Ø 200 x 90 mm) | white | 92199 |

## Technical data

| | |
|---|---|
| Voltage: | via DALI Bus, max. 22.5 V DC |
| Dimensions: | **Ø 200 x 90 mm (92199)** |
| Settings: | via DALI-Bus and application which supports DALI multisensors according to IEC62386, parts 101, 103, 303 and 304 |
| Typ. power input: | 7 mA |
| Settling time: | 200 ms |
| Detection area: | **horizontal 360° (Ceiling mounting) (93742)** |
| Range: | **max. Ø 40 m across max. Ø 20 m towards (93742)** |
| Monitored area (tangential movement): | **250 m² / 2.5 m mounting height (93742)** |
| Mounting height min./max./recommended: | **2.4 m / 2.6 m / 2.5 m (93742)** |
| Degree / class of protection: | **IP20 / Class II + IP54 (93752)** |
| Impact strength: | **IK09 (92199)** |
| Measured light output: | 0 - 4095 Lux, Mixed light measuring |
| Ambient temperature: | -25 °C to +55 °C |
| Housing: | **polycarbonate, UV-resistant + coated steel basket (92199)** |
| Material color: | **traffic white mat, similar to RAL9016 (93742)** |

## Product information

Set : PD4N-BMS DALI-2 + SM socle mounting set IP54 PD2N- / PD4N-FM traffic white mat, similar to RAL9016 + Corridor lens PD4N type A, Cover ring traffic white mat, similar to RAL9016 + Wire basket BSK (Ø 200 x 90 mm) white

Long-range DALI-2 multisensor (input device)

DALI-2 certified product

Powered via DALI bus

Bright LED indication for commissioning

DALI multimaster technology according to IEC 62386 part 103

Instance 0 provides information regarding occupancy and movement for the DALI-Bus according to IEC 62386 part 303

Instance 1 provides LUX values for the DALI-Bus according to IEC 62386 part 304

Parameterisation is possible via mandatory Multimaster-Application-Controller of any manufacturer. This controller must support IEC 62386 parts 101/103/303/304.

Mixed light measurement with internal and external light sensor

Suitable for mounting in false ceilings and flush-mounting

Accessory for surface mounting available

Detection area can be restricted with blinds

Individual adaption of detection sensitivity for each PIR sensor

Status LEDs can be activated / deactivated

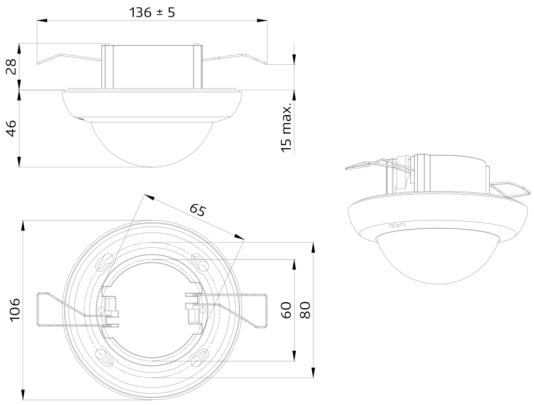
136 ± 5
28
46
15 max.
65
106
60
80

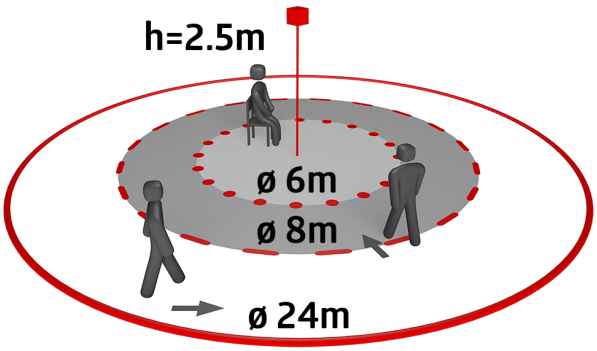
h=2.5m
ø 6m
ø 8m
ø 24m

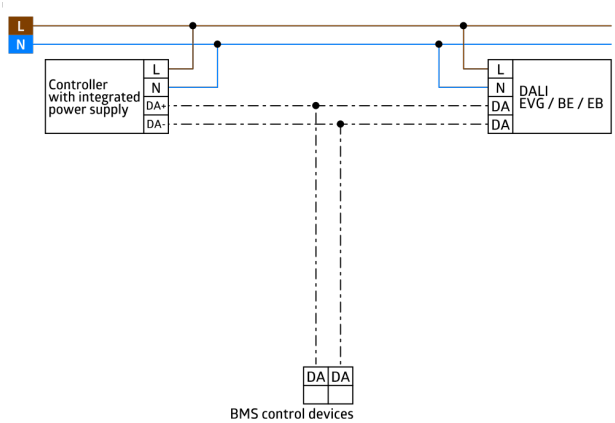
L
N
Controller with integrated power supply
L
N
DA+
DA-
L
N
DA
DA
DALI EVG / BE / EB
DA
DA
BMS control devices

## Set items

To receive the bundle according to the technical specification, please order the items listed.



**PD4N-BMS DALI-2**
Art.No: 93546

Voltage: via DALI Bus, max. 22.5 V DC
Dimensions: Ø 106 x 68 mm
Settings: via DALI-Bus and application which supports DALI multisensors according to IEC62386, parts 101, 103, 303 and 304



**SM socle mounting set IP54 PD2N- / PD4N-FM**
Art.No: 93752

Dimensions: Ø 109 x 19 mm
Degree / class of protection: IP54
Housing: polycarbonate, UV-resistant



**Corridor lens PD4N type A, Cover ring**
Art.No: 93742

Detection area: horizontal 360° (Ceiling mounting)
Range: max. Ø 40 m across max. Ø 20 m towards
Monitored area (tangential movement): 250 m² / 2.5 m mounting height

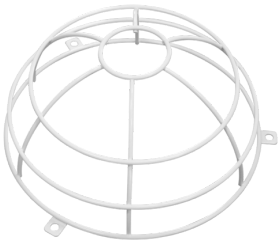

**Wire basket BSK (Ø 200 x 90 mm)**
Art.No: 92199

Dimensions: Ø 200 x 90 mm
Impact strength: IK09
Housing: coated steel basket