B.E.G. LUXOMAT® net



PD4N-DALI-LINK Set 93377-93752-93732-92199

DALI-LINK PIR motion sensor with 360° detection and a range of up to Ø24m (450 m²), for integration into DALI-LINK lighting control systems

Order data

Designation	Colour	Art.No
PD4N-DALI-LINK	white	93377
SM socle mounting set IP54 PD2N- / PD4N-FM	traffic white	93752
lens PD4N, Cover ring	traffic white	93732
Wire basket BSK (Ø 200 x 90 mm)	white	92199

Technical data

Voltage:	via DALI Bus, max. 22.5 V DC
Dimensions:	**Ø 200 x 90 mm (92199)**
Settings:	PBM-DALI-LINK-4W-BLE + Smartphone with DALI-LINK App (iOS / Android)
Typ. power input:	7 mA
Detection area:	horizontal 360° (Ceiling mounting)
Range:	max. Ø 24 m across max. Ø 8 m towards max. Ø 6.4 m seated
Monitored area (tangential movement):	450 m² / 2.5 m mounting height
Mounting height min./max./recommended:	2 m / 10 m / 2.5 m
Degree / class of protection:	**IP20 / Class II + IP54 (93752)**
Impact strength:	**IK09 (92199)**
Ambient temperature:	-25 °C to +55 °C
Housing:	**polycarbonate, UV-resistant + coated steel basket (92199)**
Material color:	**traffic white mat, similar to RAL9016 (93732)**
Follow-up time:	1 sec – 120 min
Orientation light:	5 – 100 % / 1 min – 120 min / ∞
Brightness set value:	10 – 2500 Lux

Product information

Set : PD4N-DALI-LINK + SM socle mounting set IP54 PD2N- / PD4N-FM traffic white mat, similar to RAL9016 + lens PD4N, Cover ring traffic white mat, similar to RAL9016 + Wire basket BSK (Ø 200 x 90 mm) white

Wide motion detection range DALI multisensor

Powered via DALI bus

Seemless integration in DALI lighting control system B.E.G. LUXOMAT®net DALI-LINK as modular multimaster option

Detection area can be extended thanks to master-slave-mode

Mixed light measurement with internal and external light sensor

Semi-automatic, full-automatic or twilight switch mode

Integrated daylight harvesting circuit (or switch output)

Guided Light, Soft-Start PLUS, Orientation light PLUS

Works out-of-the box for easy installation check

Full range of functions can only be activated with other products of the product group B.E.G. LUXOMAT®net DALI-LINK

Detection area can be restricted with blinds

This article is a component of a lighting control system from B.E.G., which supports the use of DALI control gear (luminaires, relays) from other manufacturers

The use of DALI application controllers from other manufacturers is not supported

The use of DALI input devices (sensors, push-buttons) from other manufacturers is not supported

Additional system components (hardware) from B.E.G. are required

Additional free software from B.E.G. is required

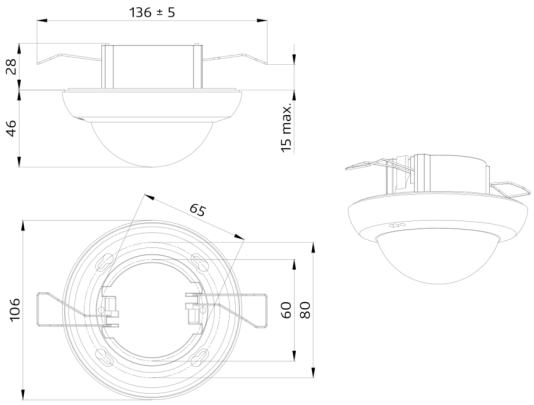
136 ± 5
28
46
15 max.
65
106
60
80

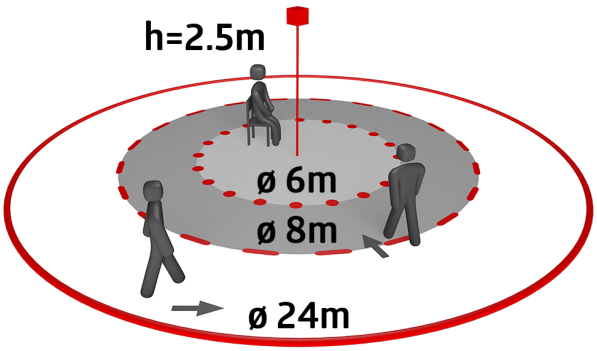
h=2.5m
ø 6m
ø 8m
ø 24m

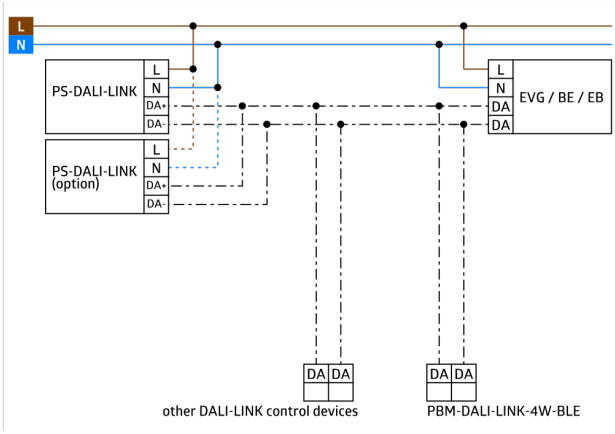
L
N
PS-DALI-LINK
L
N
DA+
DA-
PS-DALI-LINK (option)
L
N
DA+
DA-
L
N
DA
DA
EVG / BE / EB
DA DA
other DALI-LINK control devices
DA DA
PBM-DALI-LINK-4W-BLE

Set items

To receive the bundle according to the technical specification, please order the items listed.



PD4N-DALI-LINK
Art.No: 93377

Voltage: via DALI Bus, max. 22.5 V DC
Dimensions: Ø 106 x 68 mm
Settings: PBM-DALI-LINK-4W-BLE + Smartphone with DALI-LINK App (iOS / Android)



SM socle mounting set IP54 PD2N- / PD4N-FM
Art.No: 93752

Dimensions: Ø 109 x 19 mm
Degree / class of protection: IP54
Housing: polycarbonate, UV-resistant

lens PD4N, Cover ring
Art.No: 93732

Detection area: horizontal 360° (Ceiling mounting)
Range: max. Ø 24 m across
max. Ø 8 m towards
max. Ø 6.4 m seated
Monitored area (tangential movement): 450 m² / 2.5 m mounting height

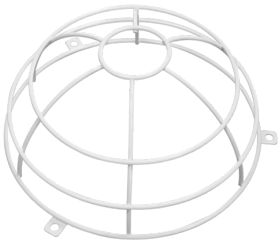

Wire basket BSK (Ø 200 x 90 mm)
Art.No: 92199

Dimensions: Ø 200 x 90 mm
Impact strength: IK09
Housing: coated steel basket