B.E.G. LUXOMAT® net




# PD4N-DALI-LINK Set 93377-93753-93743

DALI-LINK PIR motion sensor with 360° detection and a range of up to Ø24m (450 m²), for integration into DALI-LINK lighting control systems

## Order data

| Designation | Colour | Art.No |
|---|---|---|
| PD4N-DALI-LINK | white | 93377 |
| SM socle mounting set IP54 PD2N- / PD4N-FM | black | 93753 |
| Corridor lens PD4N type A, Cover ring | black | 93743 |

## Technical data

| | |
|---|---|
| Voltage: | via DALI Bus, max. 22.5 V DC |
| Dimensions: | **Ø 106 x 68 mm + Ø 109 x 19 mm (93753)** |
| Settings: | PBM-DALI-LINK-4W-BLE + Smartphone with DALI-LINK App (iOS / Android) |
| Typ. power input: | 7 mA |
| Detection area: | **horizontal 360° (Ceiling mounting) (93743)** |
| Range: | **max. Ø 40 m across max. Ø 20 m towards (93743)** |
| Monitored area (tangential movement): | **250 m² / 2.5 m mounting height (93743)** |
| Mounting height min./max./recommended: | **2.4 m / 2.6 m / 2.5 m (93743)** |
| Degree / class of protection: | **IP20 / Class II + IP54 (93753)** |
| Impact strength: | IK04 |
| Ambient temperature: | -25 °C to +55 °C |
| Housing: | polycarbonate, UV-resistant |
| Material color: | **black mat, similar to RAL9005 (93743)** |
| Follow-up time: | 1 sec – 120 min |
| Orientation light: | 5 – 100 % / 1 min – 120 min / ∞ |
| Brightness set value: | 10 – 2500 Lux |

## Product information

Set : PD4N-DALI-LINK + SM socle mounting set IP54 PD2N- / PD4N-FM black mat, similar to RAL9005 + Corridor lens PD4N type A, Cover ring black mat, similar to RAL9005

Wide motion detection range DALI multisensor

Powered via DALI bus

Seemless integration in DALI lighting control system B.E.G. LUXOMAT®net DALI-LINK as modular multimaster option

Detection area can be extended thanks to master-slave-mode

Mixed light measurement with internal and external light sensor

Semi-automatic, full-automatic or twilight switch mode

Integrated daylight harvesting circuit (or switch output)

Guided Light, Soft-Start PLUS, Orientation light PLUS

Works out-of-the box for easy installation check

Full range of functions can only be activated with other products of the product group B.E.G. LUXOMAT®net DALI-LINK

Detection area can be restricted with blinds

This article is a component of a lighting control system from B.E.G., which supports the use of DALI control gear (luminaires, relays) from other manufacturers

The use of DALI application controllers from other manufacturers is not supported

The use of DALI input devices (sensors, push-buttons) from other manufacturers is not supported

Additional system components (hardware) from B.E.G. are required

Additional free software from B.E.G. is required

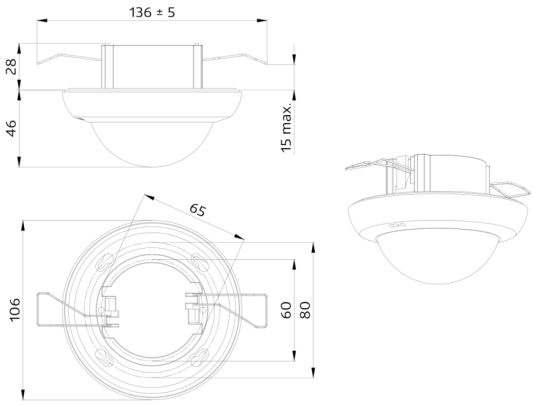
136 ± 5
28
46
15 max.
65
106
60
80

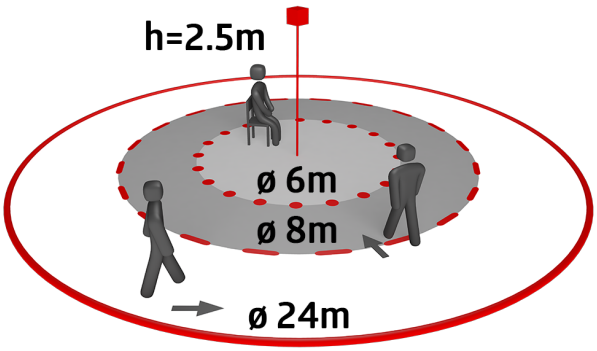
h=2.5m
ø 6m
ø 8m
ø 24m

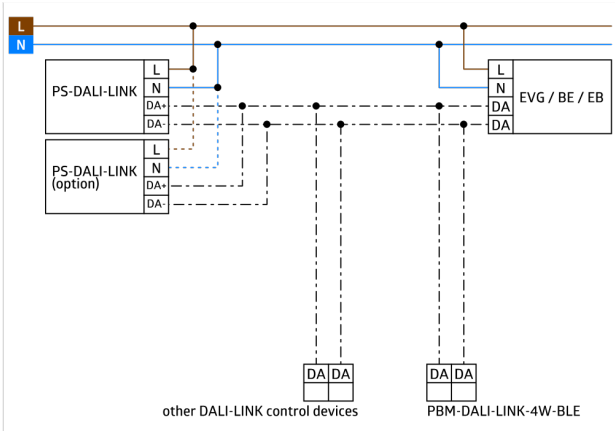
L
N
PS-DALI-LINK
L
N
DA+
DA-
PS-DALI-LINK (option)
L
N
DA+
DA-
L
N
DA
DA
EVG / BE / EB
DA DA
other DALI-LINK control devices
DA DA
PBM-DALI-LINK-4W-BLE

## Set items

To receive the bundle according to the technical specification, please order the items listed.



**PD4N-DALI-LINK**
Art.No: 93377

Voltage: via DALI Bus, max. 22.5 V DC
Dimensions: Ø 106 x 68 mm
Settings: PBM-DALI-LINK-4W-BLE + Smartphone with DALI-LINK App (iOS / Android)



**SM socle mounting set IP54 PD2N- / PD4N-FM**
Art.No: 93753

Dimensions: Ø 109 x 19 mm
Degree / class of protection: IP54
Housing: polycarbonate, UV-resistant



**Corridor lens PD4N type A, Cover ring**
Art.No: 93743

Detection area: horizontal 360° (Ceiling mounting)
Range: max. Ø 40 m across
max. Ø 20 m towards
Monitored area (tangential movement): 250 m² / 2.5 m mounting height