B.E.G. LUXOMAT® net



PD4N-KNXs-DX-FM Set 93517-93753-93733-92199

KNX PIR Motion Sensor (Deluxe) with 360° detection and a range of up to Ø24m (450 m²)

Order data

Designation	Colour	Art.No
PD4N-KNXs-DX-FM	white	93517
SM socle mounting set IP54 PD2N- / PD4N-FM	black	93753
lens PD4N, Cover ring	black	93733
Wire basket BSK (Ø 200 x 90 mm)	white	92199

Technical data

Voltage:	via KNX BUS
Dimensions:	**Ø 200 x 90 mm (92199)**
Typ. power input:	12 mA
Detection area:	horizontal 360° (Ceiling mounting)
Range:	max. Ø 24 m across max. Ø 8 m towards max. Ø 6.4 m seated
Monitored area (tangential movement):	450 m² / 2.5 m mounting height
Mounting height min./max./recommended:	2 m / 10 m / 2.5 m
Degree / class of protection:	**IP20 / Class III + IP54 (93753)**
Impact strength:	**IK09 (92199)**
Ambient temperature:	-25 °C to +55 °C
Temperature measurement range:	-5 °C to +45 °C
Housing:	**polycarbonate, UV-resistant + coated steel basket (92199)**
Material color:	**black mat, similar to RAL9005 (93733)**
Number of light sensors:	2
Number of PIR sensors:	4
KNX TP 256:	Yes
KNX Secure:	Yes
Orientation light:	5 – 100 % / OFF / 1 min – 255 min
Night light:	5 – 100 %
Brightness set value:	5 – 2000 Lux

Product information

Set : PD4N-KNXs-DX-FM + SM socle mounting set IP54 PD2N- / PD4N-FM black mat, similar to RAL9005 + lens PD4N, Cover ring black mat, similar to RAL9005 + Wire basket BSK (Ø 200 x 90 mm) white

KNX occupancy detector with integrated KNX bus connector

KNX Secure ready

HCL/RGB control

Parameterisation from ETS 5 for integration into KNX systems

Individual adaption of detection sensitivity for each PIR sensor

PIR sensors can be deactivated individually

Direction of movement can be identified

Mixed light measurement using internal, external and remote (optional) light sensors

Intelligent semi-automatic mode, occupancy-independent regulating mode (photoelectric switch), full automatic mode

1 x Light (for regulating or switching), 1 x slave output, 3 separate HVAC-blocs

Regulation of up to three lighting groups using offset (external influence possible)

Short presence, self-adjusting follow-up time, corridor function

Various locking functions

Soft-start

Two logic modules

Recall of light scenes

Deactivatable status indicators

Temperature- and noise sensor

The product database for import into the ETS database can be downloaded from the B.E.G. homepage.

Detection area can be extended thanks to master-slave-mode

Extensive optimization options for light measurement

Measured light value is communicated to the bus

Adaption of dimming curve

Bidirectionally remote control-capable with the IR adapter and the B.E.G. smartphone app

PIN code

IR remote control-capable via IR remote control (optionally)

5 button remote control, programmable at choice (accessory)

Programming button (phys. address) can be operated via remote control

HVAC mode (0=automatic, 1=comfort, 2=stand-by, 3=economy, 4=antifreeze/heat protection)

Manual influence via external KNX push buttons possible

Function control (heartbeat, cyclical sending)

Occupancy simulation

Forced switch-off

Intelligent central-off function

Premonition of switch-off

Burn-in function for fluorescent lamps selectable from 1h till 100h

Behaviour upon bus voltage return definable at choice

Variable safety pause after switching off the lights

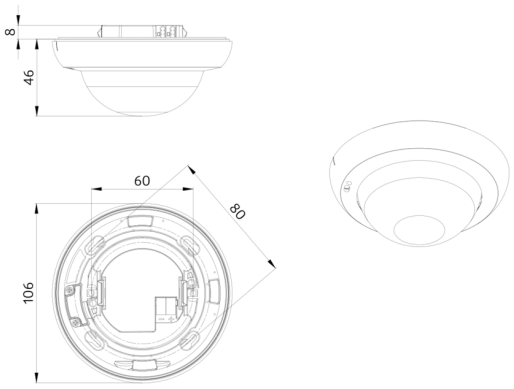
8
46
60
80
106

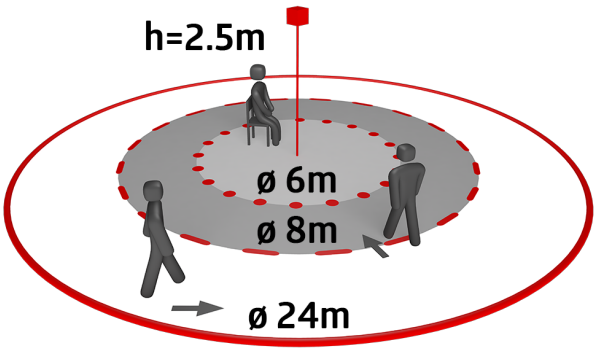
h=2.5m
ø 6m
ø 8m
ø 24m

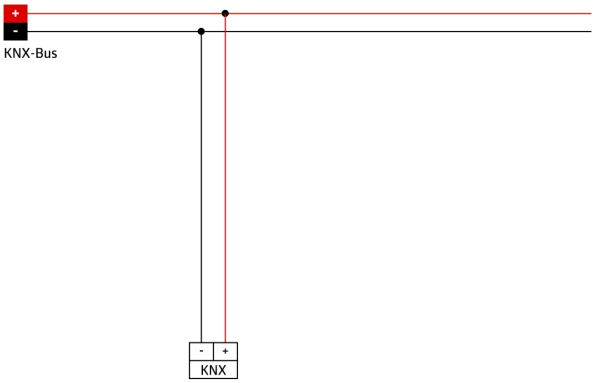
+
-
KNX-Bus
-
+
KNX

Set items

To receive the bundle according to the technical specification, please order the items listed.



PD4N-KNXs-DX-FM
Art.No: 93517

Voltage: via KNX BUS
Dimensions: Ø 106 x 55 mm
Typ. power input: 12 mA



SM socle mounting set IP54 PD2N- / PD4N-FM
Art.No: 93753

Dimensions: Ø 109 x 19 mm
Degree / class of protection: IP54
Housing: polycarbonate, UV-resistant



lens PD4N, Cover ring
Art.No: 93733

Detection area: horizontal 360° (Ceiling mounting)
Range: max. Ø 24 m across
max. Ø 8 m towards
max. Ø 6.4 m seated
Monitored area (tangential movement): 450 m² / 2.5 m mounting height

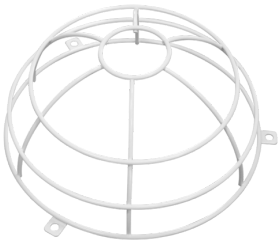

Wire basket BSK (Ø 200 x 90 mm)
Art.No: 92199

Dimensions: Ø 200 x 90 mm
Impact strength: IK09
Housing: coated steel basket